NEMA | **Model DPB.504D-C**
MFG PN: TDA56 1/2U4B

Model **DPB.504D-C**

Product Data Package

MODEL	HP	RPM	VOLTAGE	PHASE	Hz	FRAME	MOUNT	ENCLOSURE
DPB.504D-C	0.5	1750	230/460	3	60	56C	Rigid/C-Flange	ODP

Toronto

TOLL FREE 1.888.286.1820
PHONE 905.829.1001
EMAIL info@techtopcanada.com

Montreal

TOLL FREE 1.844.354.5111
PHONE 514.354.1002
EMAIL infoQC@techtopcanada.com

Moncton

PHONE 506.386.5794
EMAIL infoNB@techtopcanada.com

Winnipeg

PHONE 204.633.2779
EMAIL infoMB@techtopcanada.com

Vancouver

PHONE 604.525.1551
EMAIL infoBC@techtopcanada.com

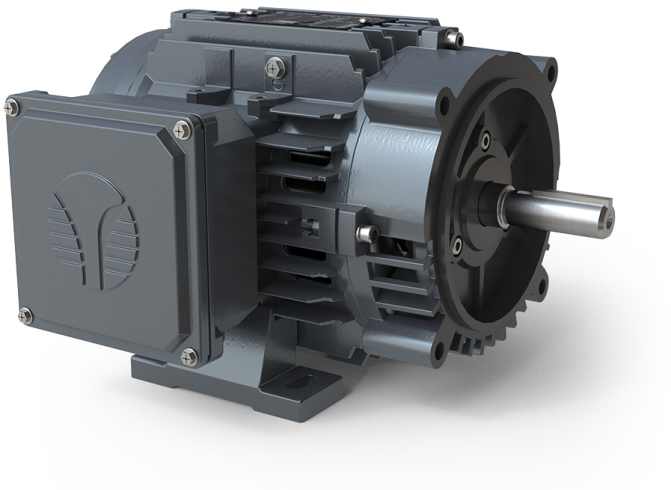

Index

Motor General Data Sheet P 2
Nameplate Information P 3
Technical Performance Data P 4
Motor General Wiring Diagram P 5
Motor General Outline Drawing P 6

NEMA | Model DPB.504D-C

MFG PN: TDA56 1/2U4B

ELECTRICAL DATA		
Rated Motor Output Power	0.5	HP
	0.37	kW
Rated Motor Speed	1750	r/min 60Hz
	-	r/min 50Hz
Rated Motor Voltage (+/-10%)	230/460	V/60Hz
	-	V/50Hz
Rated Motor Current	1.89/0.94	A (I_n) @ 60Hz
	-	A (I_n) @ 50Hz
Phase	3	Ø
Locked Rotor Current @ High Voltage	-	A (I_n) @ 60Hz
FI Current @ 208V	2.08	A (I_n) @ 60Hz
Service Factor	1.25	@ 60Hz
	-	@ 50Hz
KVA Code	-	60Hz
	-	50Hz
Nominal Efficiency	78.2	% @ 60Hz
Nominal Power Factor	0.63	cosΦ @ 60Hz
Leads (Qty, Size)	9	18
Connection	YY/Y	–
Coil Resistance	-	Ω
Start Capacitor	-	µF/V
Run Capacitor	-	µF/V
VFD DUTY (S.F. 1.0)	**RATIO**	**Hz**
Variable Torque	30:1	2 - 60
Constant Torque	15:1	4 - 60
FULL LOAD TEMPERATURE RISE		
Full Load Temperature Rise	-	°C @ 60Hz
	-	°C @ 50Hz

GENERAL DATA		
Frame Size	56C	
Enclosure	ODP	
Mounting	Rigid/C-Flange	
Approximate Weight (lbs.)	16.3 lbs.	
Casing Material / Fan Cover	Cast Aluminum	Steel
Shaft Material	1045	
NEMA Design	B	
Degree of Protection (IP)	23	
Insulation Class / Temp Rise (60Hz)	F	B
Tropicalization	YES	
Duty	Cont. / S1	
Conduit Box Location	F1	
Feet Removable / Double Drilled	YES	NO
Paintwork	7024	
	Graphite Gray	
MECHANICAL DATA		
Bearing DE Side	6204 ZZ	
Bearing ODE Side	6204 ZZ	
Grease Type	Mobil Polyrex EM	
Compensation Ring (wavy washer)	NDE	
Moment of Inertia (lb-ft^2)	-	
Sound Pressure @ 3 FT dBA	-	
SITE CONDITIONS		
Ambient Temperature (°C)	40	
Meters Above Sea Level (MASL)	1000	
HAZARDOUS LOCATIONS		
CSA Certified	-	
Temperature Code	-	-

Questions? **Call 1.888.286.1820**

NEMA

Model DPB.504D-C

MFG PN: TDA56 1/2U4B

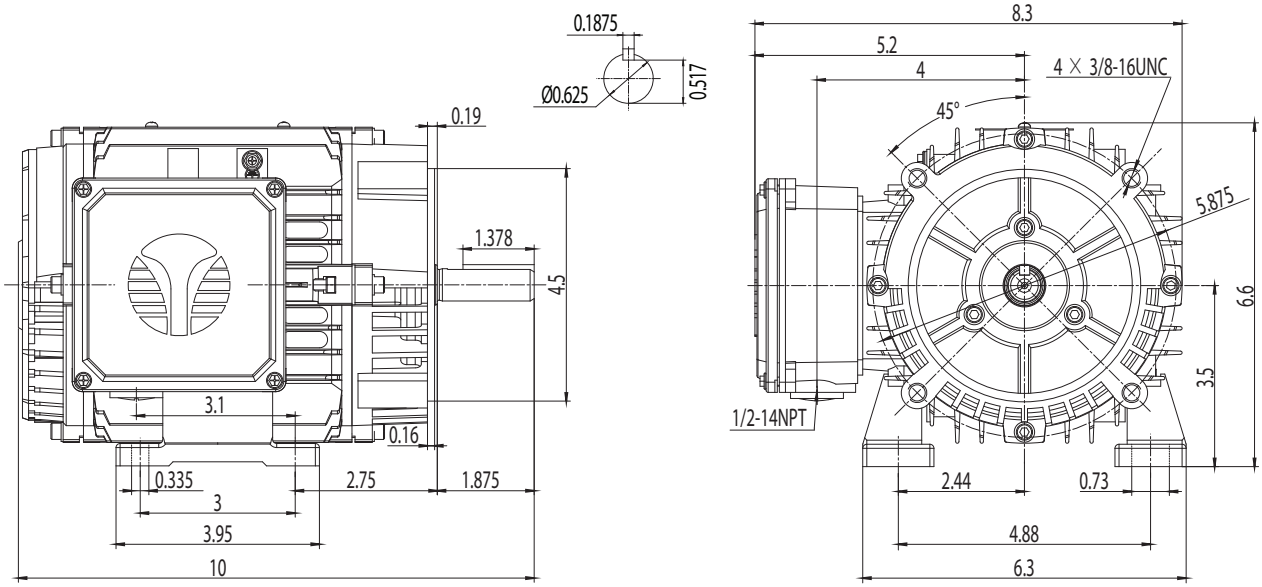

NAMEPLATE DATA	60Hz	50Hz
Horse Power	0.5	-
RPM	1750	-
Voltage	230/460	-
Full Load Amps	1.89/0.94	-
Service Factor	1.25	-
KVA Code	-	-
Full Load Amps (208V)	2.08	-
Nominal Efficiency	78.2	-
Nominal Power Factor	0.63	-
Design	B	
Frame	56C	
Enclosure Type	ODP	
IP Rating	23	
Duty	Cont. / S1	
Insulation Class	F	
Ambient Rating	40	
Drive End Bearing	6204 ZZ	
Opposite Drive End Bearing	6204 ZZ	
Weight (lbs)	16.3	

NAMEPLATE LAYOUT

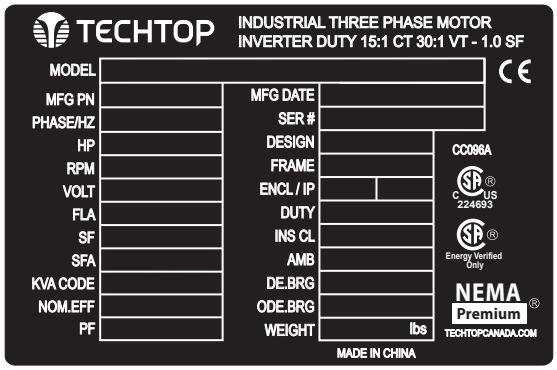

VFD DUTY (S.F. 1.0)	RATIO	Hz*
Variable Torque	30:1	2 - 60
Constant Torque	15:1	4 - 60

*For max speed please contact Techtop Canada

HAZARDOUS LOCATIONS	-
Class / Division	-
Groups	-

Questions? **Call 1.888.286.1820**

NEMA

Model DPB.504D-C

MFG PN: TDA56 1/2U4B

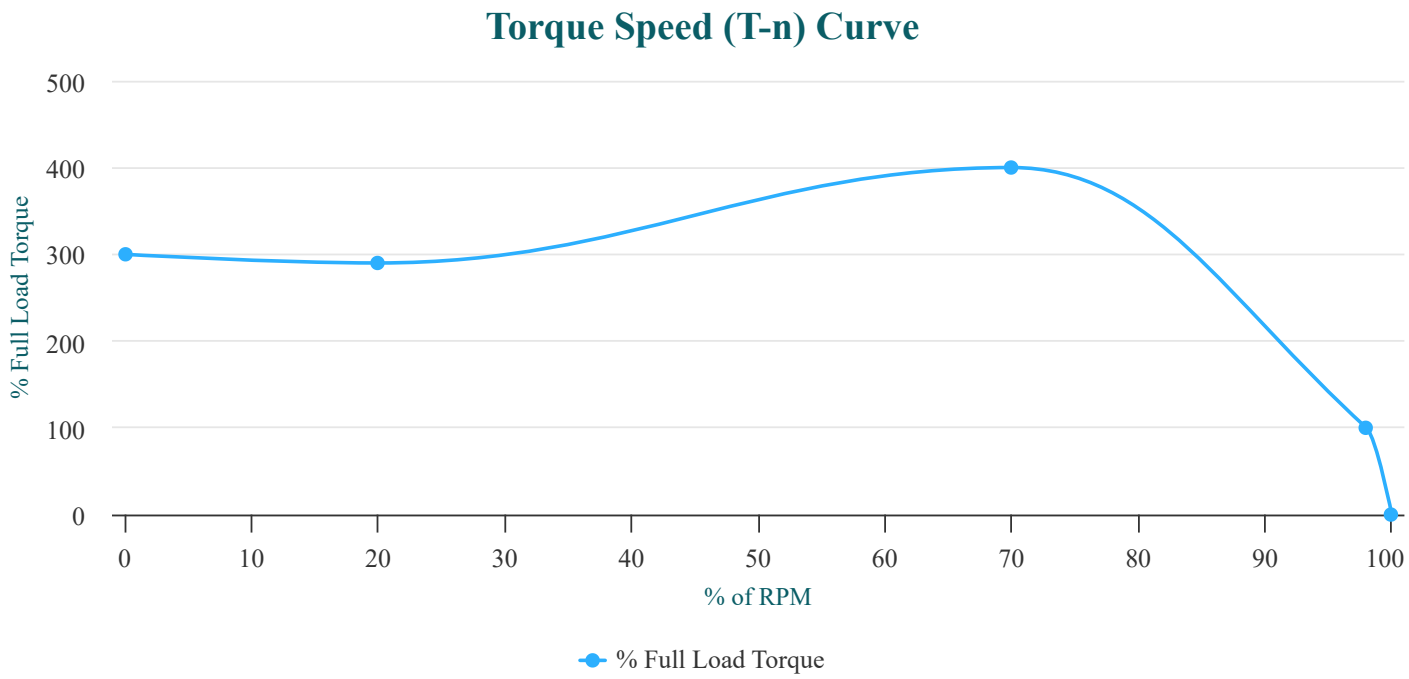

PERFORMANCE LOAD VALUES, HIGH VOLTAGE, 60Hz			TYPICAL PERFORMANCE - NOT GUARANTEED VALUES	
TORQUE VALUES	TORQUE (lb-ft)	TORQUE (% FULL LOAD)	PERFORMANCE VALUES	
Locked Rotor Torque	1.5	300	Start Configuration	DOL
Pull-Up Torque	4.4	290	Starting Current (A)	-
Breakdown Torque	6	400	No-Load Current (A)	-
Full Load Torque	4.5	100	No-Load Power Factor	-

% OF RATED LOAD	25	50	75	100	125	S.F. 1.25
Line Amperes (A)	-	-	-	-	-	-
Efficiency (%)	-	69	75	78.2	-	-
Speed (r/min)	-	-	-	-	-	-
Power Factor (cosΦ)	-	0.41	0.53	0.63	-	-
Input Power (kW)	-	-	-	-	-	-

NEMA

Model DPB.504D-C

MFG PN: TDA56 1/2U4B

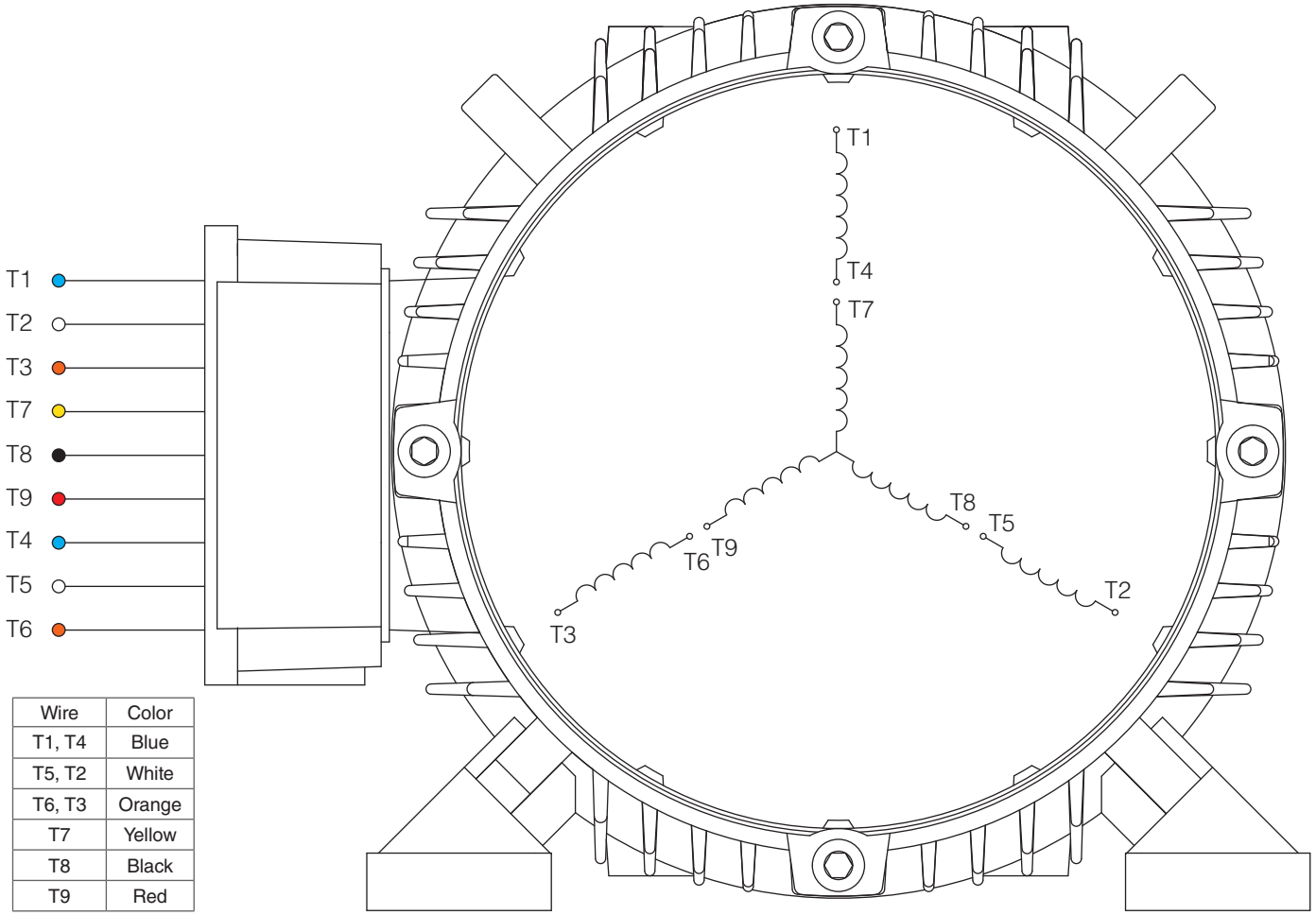

Wire	Color
T1, T4	Blue
T5, T2	White
T6, T3	Orange
T7	Yellow
T8	Black
T9	Red

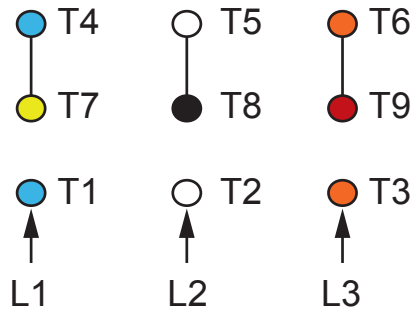

HIGH VOLTAGE
(Y)

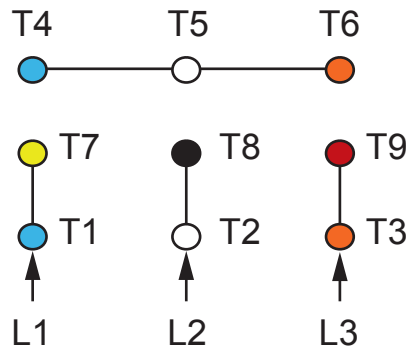

LOW VOLTAGE
(YY)

NOTES:

1. CCW ROTATION FACING ODE FOR CONNECTIONS SHOWN
2. TO REVERSE ROTATION, SWAP ANY TWO INPUT LINES
3. WHEN MOTOR IS IN F1 POSITION, LEADS INDICATED WITH "*" EXIT THE CASING ABOVE THE CENTER LINE OF THE MOTOR, THE REMAINING LEADS EXIT BELOW THE CENTER LINE
4. LEADS MUST BE NUMBERED AND COLORED AS SHOWN
5. DIAGRAMS FOR REFERENCE ONLY

TECHTOP
You can't top a Techtop.

NEMA 3Ø YY/Y 9-Lead Dual Voltage

DRAWING NUMBER:	NEMA-3-9-YY-Y
CONNECTION:	YY/Y
NUMBER OF LEADS:	9
THERMAL PROTECTION:	-

ISSUED DATE	30/06/25

PREMIUM 56C ALUMINUM MOTORS, ODP

NEMA

Model DPB.504D-C

MFG PN: TDA56 1/2U4B

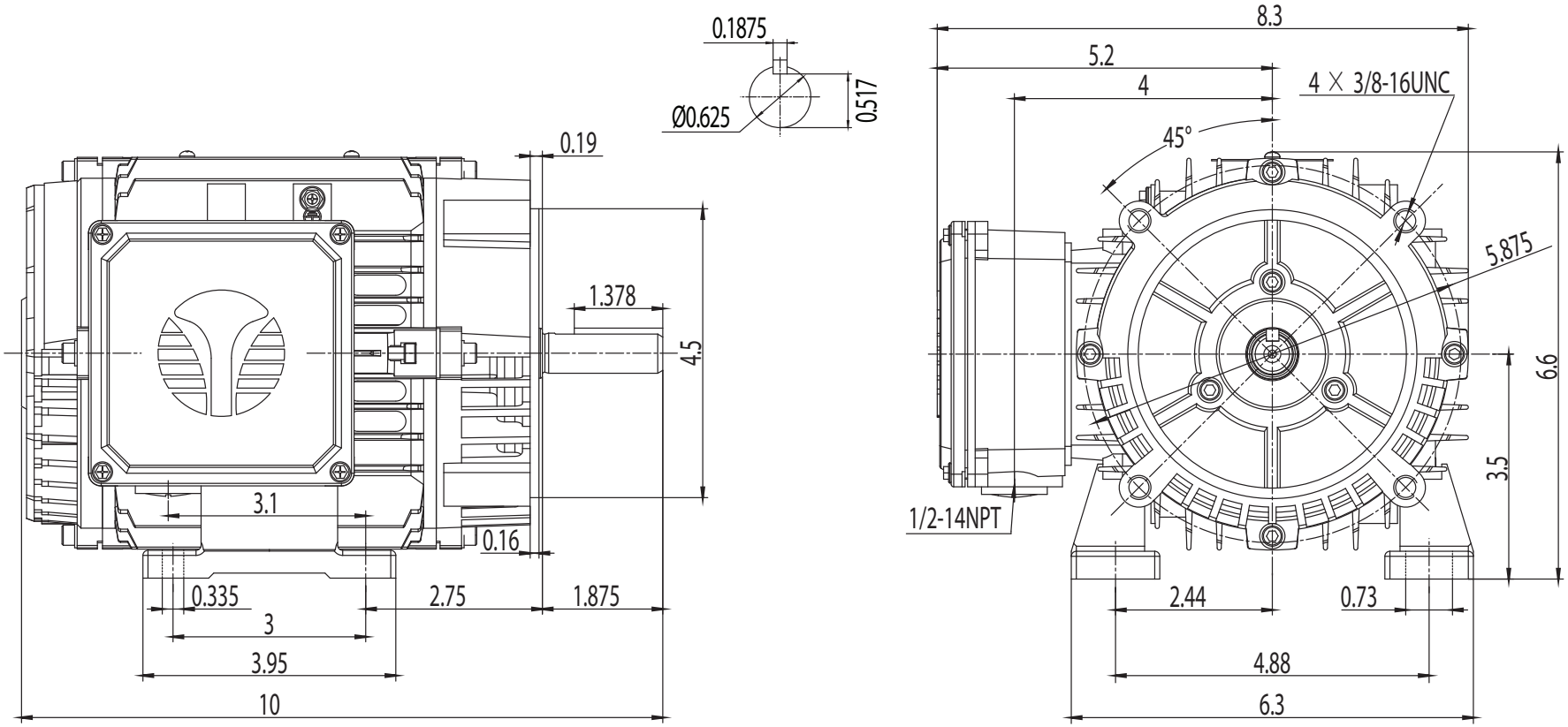

TECHTOP
You can't top a Techtop.

NEMA Premium ODP 56C

DRAWING NUMBER:	GR3-AL-DP-56C	ISSUED DATE	30/06/25
DIMENSIONS:	Inches		
MOUNTING:	Rigid/C-Flange	PREMIUM 56C ALUMINUM MOTORS, ODP	
CASING MATERIAL:	Cast Aluminum		