NEMA | **Model DPA0404F**
MFG PN: TDA 324T40U4B

# Model **DPA0404F**

## Product Data Package

| MODEL | HP | RPM | VOLTAGE | PHASE | Hz | FRAME | MOUNT | ENCLOSURE |
|---|---|---|---|---|---|---|---|---|
| DPA0404F | 40 | 1780 | 575 | 3 | 60 | 324T | Rigid | ODP |


### Toronto

TOLL FREE 1.888.286.1820
PHONE 905.829.1001
EMAIL info@techtopcanada.com

### Montreal

TOLL FREE 1.844.354.5111
PHONE 514.354.1002
EMAIL infoQC@techtopcanada.com

### Moncton

PHONE 506.386.5794
EMAIL infoNB@techtopcanada.com

### Winnipeg

PHONE 204.633.2779
EMAIL infoMB@techtopcanada.com

### Vancouver

PHONE 604.525.1551
EMAIL infoBC@techtopcanada.com


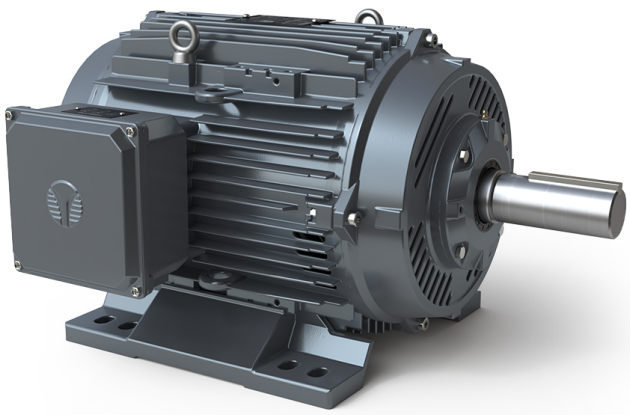

### Index


Motor General Data Sheet P 2
Nameplate Information P 3
Technical Performance Data P 4
Motor General Wiring Diagram P 5
Motor General Outline Drawing P 6

# NEMA

## Model DPA0404F
MFG PN: TDA 324T40U4B

| ELECTRICAL DATA | | |
|---|---|---|
| Rated Motor Output Power | 40 | HP |
| | 30 | kW |
| Rated Motor Speed | 1780 | r/min 60Hz |
| | - | r/min 50Hz |
| Rated Motor Voltage (+/-10%) | 575 | V/60Hz |
| | - | V/50Hz |
| Rated Motor Current | 37.91 | A ($I_n$) @ 60Hz |
| | - | A ($I_n$) @ 50Hz |
| Phase | 3 | Ø |
| Locked Rotor Current @ High Voltage | 334.64 | A ($I_n$) @ 60Hz |
| FI Current @ 208V | - | A ($I_n$) @ 60Hz |
| Service Factor | 1.25 | @ 60Hz |
| | - | @ 50Hz |
| KVA Code | K | 60Hz |
| | - | 50Hz |
| Nominal Efficiency | 94.1 | % @ 60Hz |
| Nominal Power Factor | 0.84 | cosΦ @ 60Hz |
| Leads (Qty, Size) | 6 | 10 |
| Connection | D | – |
| Coil Resistance | - | Ω |
| Start Capacitor | - | µF/V |
| Run Capacitor | - | µF/V |
| **VFD DUTY (S.F. 1.0)** | **RATIO** | **Hz** |
| Variable Torque | 30:1 | 2 - 60 |
| Constant Torque | 15:1 | 4 - 60 |
| **FULL LOAD TEMPERATURE RISE** | | |
| Full Load Temperature Rise | 53.6 | °C @ 60Hz |
| | - | °C @ 50Hz |

| GENERAL DATA | | |
|---|---|---|
| Frame Size | 324T | |
| Enclosure | ODP | |
| Mounting | Rigid | |
| Approximate Weight (lbs.) | 386 lbs. | |
| Casing Material / Fan Cover | Cast Aluminum | Steel |
| Shaft Material | 1045 | |
| NEMA Design | B | |
| Degree of Protection (IP) | 23 | |
| Insulation Class / Temp Rise (60Hz) | F | B |
| Tropicalization | YES | |
| Duty | Cont. / S1 | |
| Conduit Box Location | F1 | |
| Feet Removable / Double Drilled | YES | YES |
| Paintwork | 7024 | |
| | Graphite Gray | |
| **MECHANICAL DATA** | | |
| Bearing DE Side | 6312 C3 | |
| Bearing ODE Side | 6312 C3 | |
| Grease Type | Mobil Polyrex EM | |
| Compensation Ring (wavy washer) | NDE | |
| Moment of Inertia (lb-ft$^2$) | - | |
| Sound Pressure @ 3 FT dBA | - | |
| **SITE CONDITIONS** | | |
| Ambient Temperature (°C) | 40 | |
| Meters Above Sea Level (MASL) | 1000 | |
| **HAZARDOUS LOCATIONS** | | |
| CSA Certified | - | |
| Temperature Code | - | - |

Questions? **Call 1.888.286.1820**

# NEMA | Model DPA0404F

MFG PN: TDA 324T40U4B

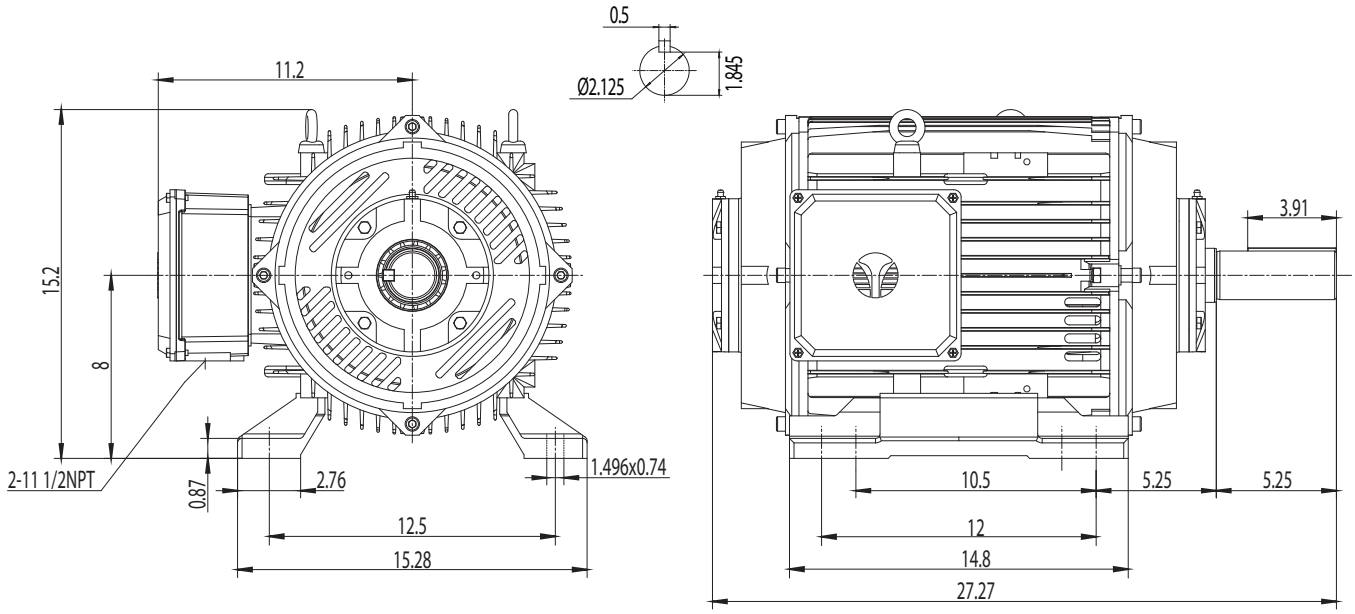


| NAMEPLATE DATA | 60Hz | 50Hz |
|---|---|---|
| Horse Power | 40 | - |
| RPM | 1780 | - |
| Voltage | 575 | - |
| Full Load Amps | 37.91 | - |
| Service Factor | 1.25 | - |
| KVA Code | K | - |
| Full Load Amps (208V) | - | - |
| Nominal Efficiency | 94.1 | - |
| Nominal Power Factor | 0.84 | - |
| Design | B | |
| Frame | 324T | |
| Enclosure Type | ODP | |
| IP Rating | 23 | |
| Duty | Cont. / S1 | |
| Insulation Class | F | |
| Ambient Rating | 40 | |
| Drive End Bearing | 6312 C3 | |
| Opposite Drive End Bearing | 6312 C3 | |
| Weight (lbs) | 386 | |

## NAMEPLATE LAYOUT

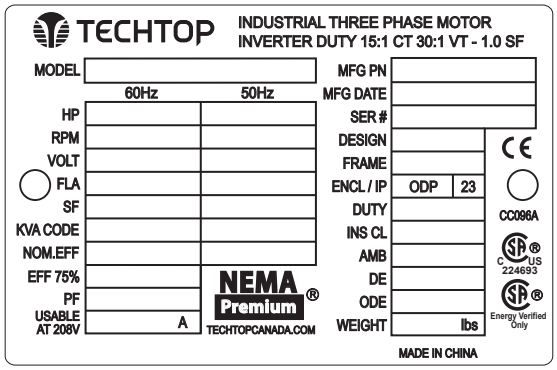


| VFD DUTY (S.F. 1.0) | RATIO | Hz* |
|---|---|---|
| Variable Torque | 30:1 | 2 - 60 |
| Constant Torque | 15:1 | 4 - 60 |

*For max speed please contact Techtop Canada

| HAZARDOUS LOCATIONS | - |
|---|---|
| Class / Division | - |
| Groups | - |

Questions? **Call 1.888.286.1820**

# NEMA

## Model DPA0404F

MFG PN: TDA 324T40U4B

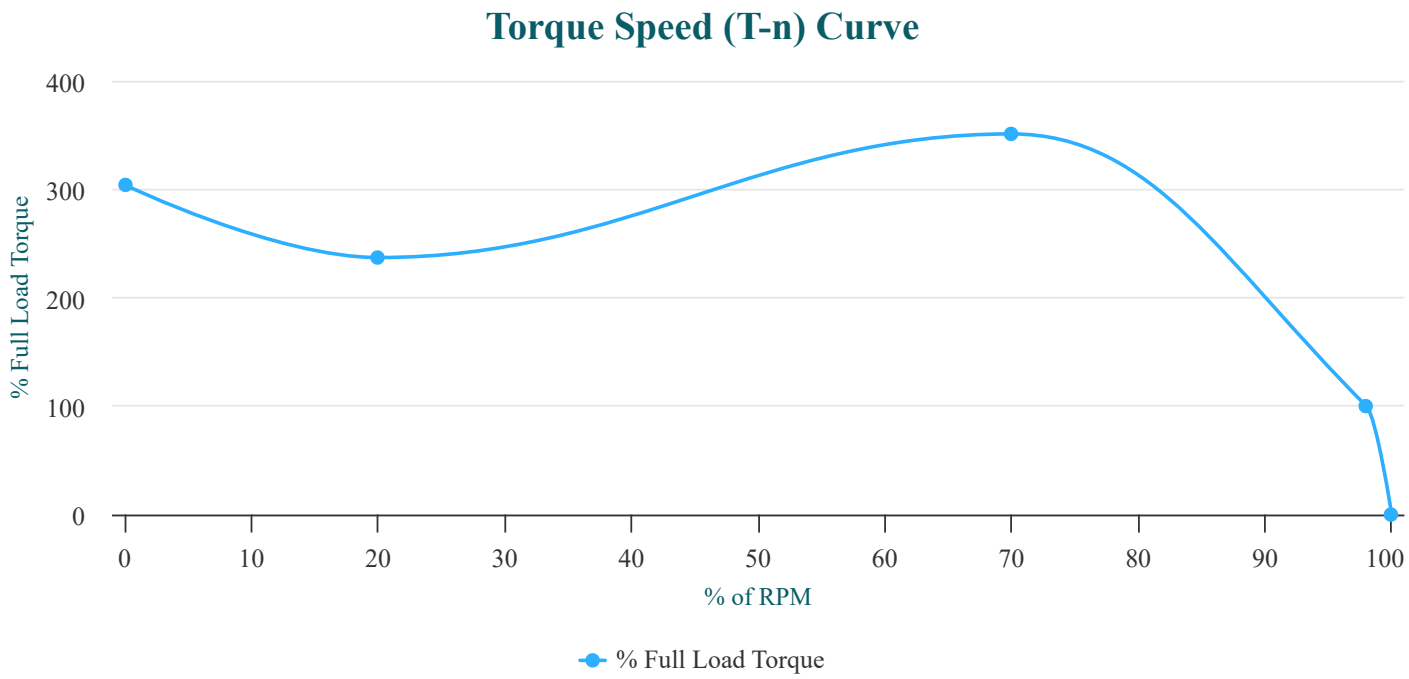


PERFORMANCE LOAD VALUES, HIGH VOLTAGE, 60Hz

| TORQUE VALUES | TORQUE (lb-ft) | TORQUE (% FULL LOAD) |
|---|---|---|
| Locked Rotor Torque | 118.1 | 304 |
| Pull-Up Torque | 279.9 | 237 |
| Breakdown Torque | 414.5 | 351 |
| Full Load Torque | 359 | 100 |

TYPICAL PERFORMANCE - NOT GUARANTEED VALUES

| PERFORMANCE VALUES | |
|---|---|
| Start Configuration | DOL |
| Starting Current (A) | 334.64 |
| No-Load Current (A) | 15.7 |
| No-Load Power Factor | - |

| % OF RATED LOAD | 25 | 50 | 75 | 100 | 125 | S.F. 1.25 |
|---|---|---|---|---|---|---|
| Line Amperes (A) | 17.6 | 23 | 29.8 | 37.7 | 46.2 | 46.2 |
| Efficiency (%) | 89.3 | 93.1 | 93.8 | 93.6 | 93.1 | 93.1 |
| Speed (r/min) | 1794 | 1788 | 1781 | 1774 | 1767 | 1767 |
| Power Factor (cosΦ) | 0.48 | 0.7 | 0.81 | 0.85 | 0.88 | 0.88 |
| Input Power (kW) | 8.39 | 16.12 | 24 | 32.05 | 40.3 | 40.3 |

# NEMA

## Model DPA0404F

MFG PN: TDA 324T40U4B

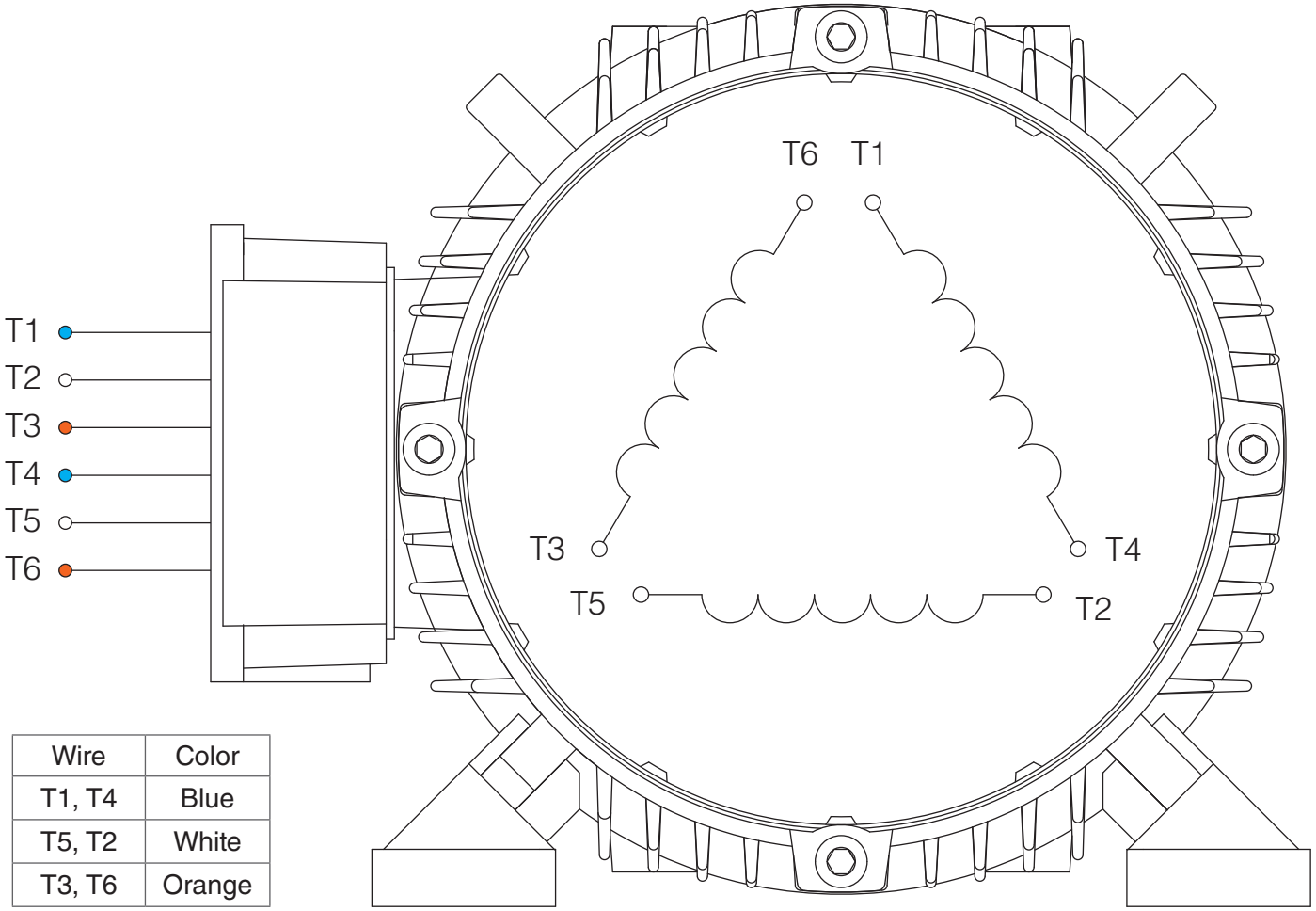


| Wire | Color |
|---|---|
| T1, T4 | Blue |
| T5, T2 | White |
| T3, T6 | Orange |

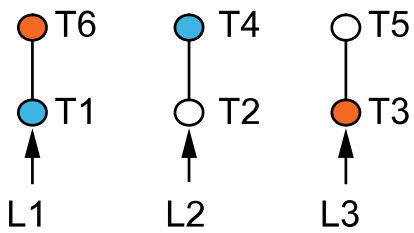


**SINGLE VOLTAGE**

NOTES:

1. CCW ROTATION FACING ODE FOR CONNECTIONS SHOWN
2. TO REVERSE ROTATION, SWAP ANY TWO INPUT LINES
3. WHEN MOTOR IS IN F1 POSITION, LEADS INDICATED WITH "*" EXIT THE CASING ABOVE THE CENTER LINE OF THE MOTOR, THE REMAINING LEADS EXIT BELOW THE CENTER LINE
4. LEADS MUST BE NUMBERED AND COLORED AS SHOWN
5. DIAGRAMS FOR REFERENCE ONLY

TECHTOP
*You can't top a Techtop.*

**NEMA 3Ø D 6-Lead Single Voltage**

| | |
|---|---|
| DRAWING NUMBER: | NEMA-3-6-D |
| CONNECTION: | D |
| NUMBER OF LEADS: | 6 |
| THERMAL PROTECTION: | - |

| | |
|---|---|
| ISSUED DATE | 20/06/25 |

PREMIUM T-FRAME ALUMINUM & CAST IRON MOTORS, ODP

# NEMA

## Model DPA0404F

MFG PN: TDA 324T40U4B

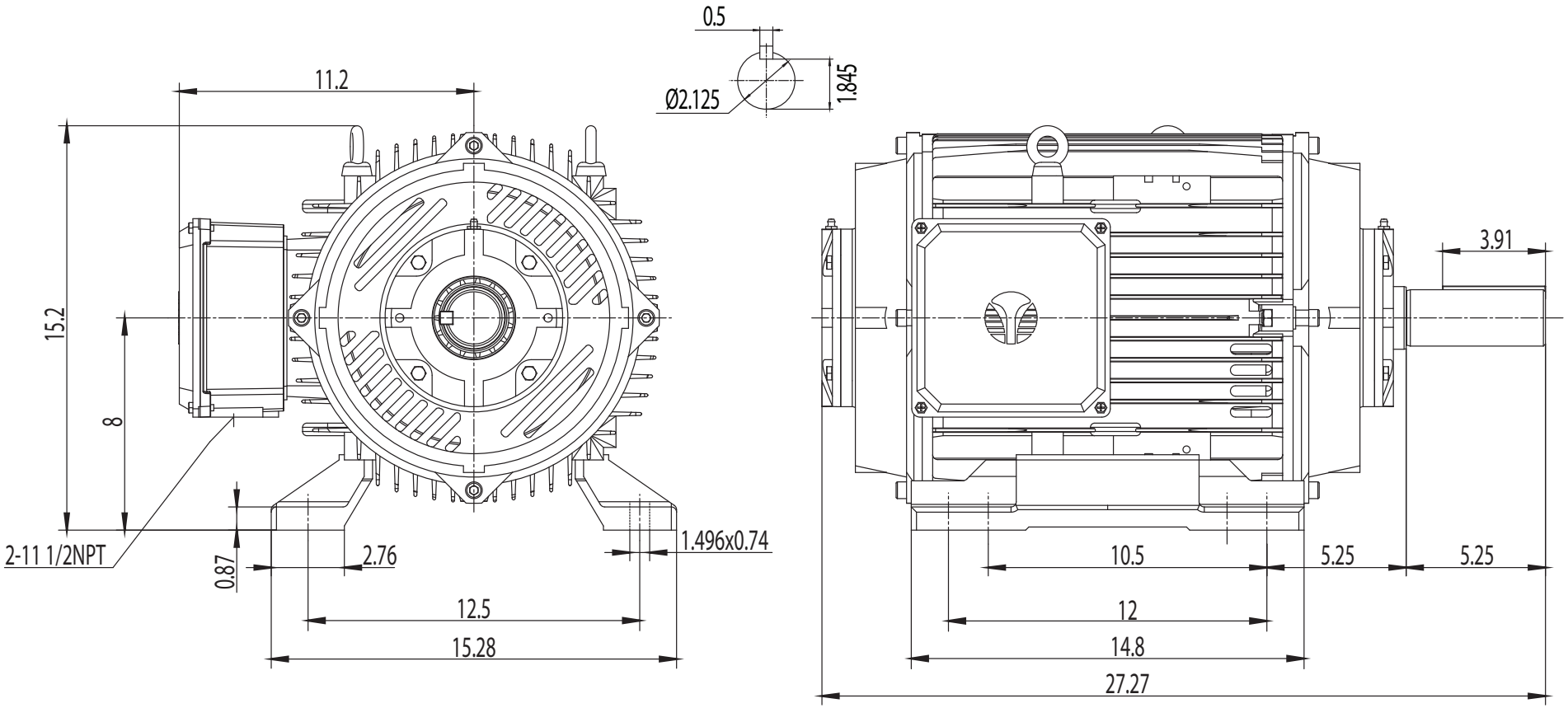


TECHTOP
You can't top a Techtop.

**NEMA Premium ODP 324T**

| | | | |
|---|---|---|---|
| DRAWING NUMBER: | GR3-AL-DP-324(6)T | ISSUED DATE | 20/06/25 |
| DIMENSIONS: | Inches | | |
| MOUNTING: | Rigid | PREMIUM T-FRAME ALUMINUM & CAST IRON MOTORS, ODP | |
| CASING MATERIAL: | Cast Aluminum | | |