TECHTOP

NEMA | **Model GRC2002E**
MFG PN: T447T 200U2B

Model **GRC2002E**

Product Data Package

MODEL	HP	RPM	VOLTAGE	PHASE	Hz	FRAME	MOUNT	ENCLOSURE
GRC2002E	200	3570	460	3	60	447TS	Rigid	TEFC

Toronto

TOLL FREE 1.888.286.1820
PHONE 905.829.1001
EMAIL info@techtopcanada.com

Montreal

TOLL FREE 1.844.354.5111
PHONE 514.354.1002
EMAIL infoQC@techtopcanada.com

Moncton

PHONE 506.386.5794
EMAIL infoNB@techtopcanada.com

Winnipeg

PHONE 204.633.2779
EMAIL infoMB@techtopcanada.com

Vancouver

PHONE 604.525.1551
EMAIL infoBC@techtopcanada.com

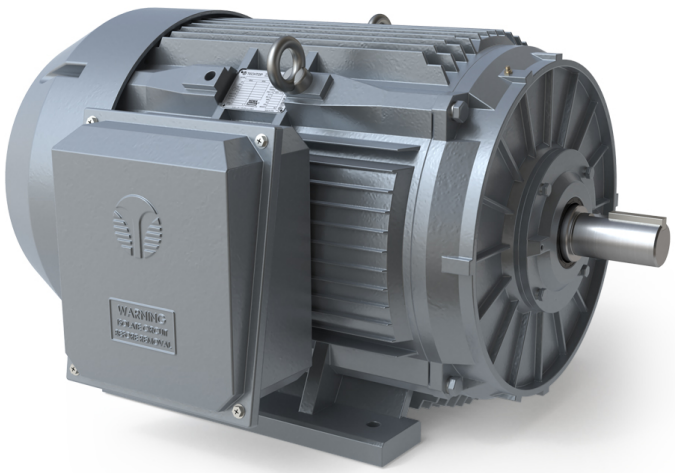

Index

Motor General Data Sheet P 2
Nameplate Information P 3
Technical Performance Data P 4
Motor General Wiring Diagram P 5
Motor General Outline Drawing P 6

NEMA | Model GRC2002E

MFG PN: T447T 200U2B

ELECTRICAL DATA		
Rated Motor Output Power	200	HP
	-	kW
Rated Motor Speed	3570	r/min 60Hz
	2955	r/min 50Hz
Rated Motor Voltage (+/-10%)	460	V/60Hz
	380	V/50Hz
Rated Motor Current	218.00	A (I_n) @ 60Hz
	263.00	A (I_n) @ 50Hz
Phase	3	Ø
Locked Rotor Current @ High Voltage	2218	A (I_n) @ 60Hz
FI Current @ 208V	-	A (I_n) @ 60Hz
Service Factor	1.15	@ 60Hz
	1	@ 50Hz
KVA Code	K	60Hz
	H	50Hz
Nominal Efficiency	95.4	% @ 60Hz
Nominal Power Factor	0.9	cosΦ @ 60Hz
Leads (Qty, Size)	6	1
Connection	D	–
Coil Resistance	4.9	Ω
Start Capacitor	-	µF/V
Run Capacitor	-	µF/V
VFD DUTY (S.F. 1.0)	**RATIO**	**Hz**
Variable Torque	30:1	2 - 60
Constant Torque	15:1	4 - 60
FULL LOAD TEMPERATURE RISE		
Full Load Temperature Rise	79.2	°C @ 60Hz
	-	°C @ 50Hz

GENERAL DATA		
Frame Size	447TS	
Enclosure	TEFC	
Mounting	Rigid	
Approximate Weight (lbs.)	1912.3 lbs.	
Casing Material / Fan Cover	Cast Iron	Cast Iron
Shaft Material	4140	
NEMA Design	A	
Degree of Protection (IP)	55	
Insulation Class / Temp Rise (60Hz)	F	B
Tropicalization	YES	
Duty	Cont. / S1	
Conduit Box Location	F1	
Feet Removable / Double Drilled	NO	YES
Paintwork	7024	
	Graphite Gray	
MECHANICAL DATA		
Bearing DE Side	6316 C3	
Bearing ODE Side	6316 C3	
Grease Type	Mobil Polyrex EM	
Compensation Ring (wavy washer)	NDE	
Moment of Inertia (lb-ft^2)	30.71	
Sound Pressure @ 3 FT dBA	96.1	
SITE CONDITIONS		
Ambient Temperature (°C)	40	
Meters Above Sea Level (MASL)	1000	
HAZARDOUS LOCATIONS		
CSA Certified	A, B, C & D	
Temperature Code	T3A	-

NEMA | Model GRC2002E

MFG PN: T447T 200U2B

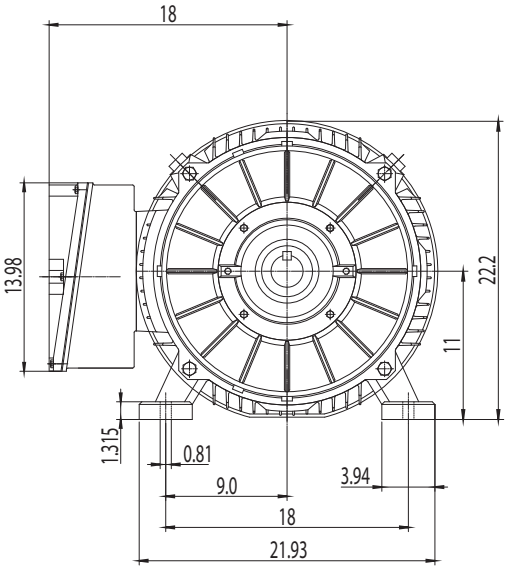

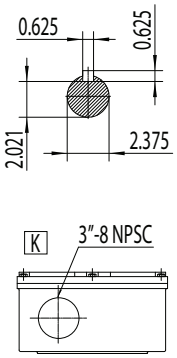

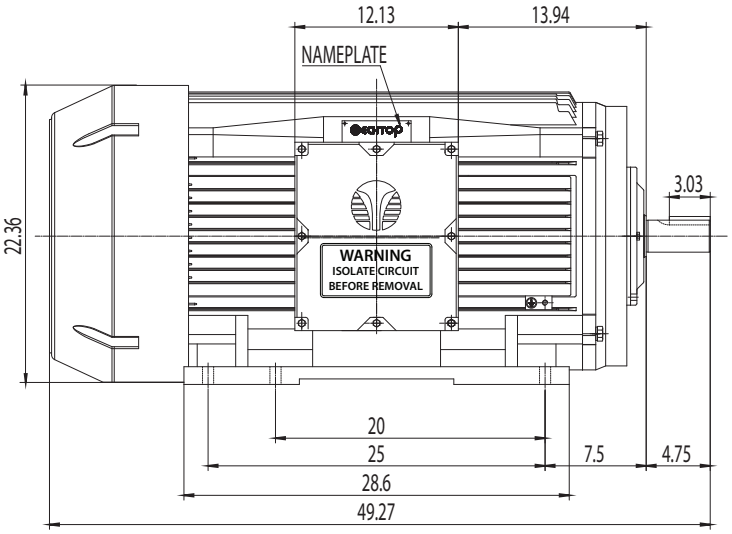

NAMEPLATE DATA	60Hz	50Hz
Horse Power	200	200
RPM	3570	2955
Voltage	460	380
Full Load Amps	218.00	263.00
Service Factor	1.15	1
KVA Code	K	H
Full Load Amps (208V)	-	-
Nominal Efficiency	95.4	93.6
Nominal Power Factor	0.9	-
Design	A	
Frame	447TS	
Enclosure Type	TEFC	
IP Rating	55	
Duty	Cont. / S1	
Insulation Class	F	
Ambient Rating	40	
Drive End Bearing	6316 C3	
Opposite Drive End Bearing	6316 C3	
Weight (lbs)	1912.3	

NAMEPLATE LAYOUT

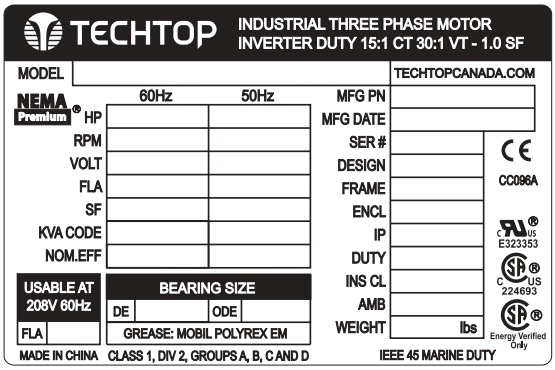

VFD DUTY (S.F. 1.0)	RATIO	Hz*
Variable Torque	30:1	2 - 60
Constant Torque	15:1	4 - 60

*For max speed please contact Techtop Canada

HAZARDOUS LOCATIONS	CSA CERTIFIED
Class / Division	Class I, Div. 2
Groups	A, B, C & D

Questions? **Call 1.888.286.1820**

NEMA

Model GRC2002E

MFG PN: T447T 200U2B

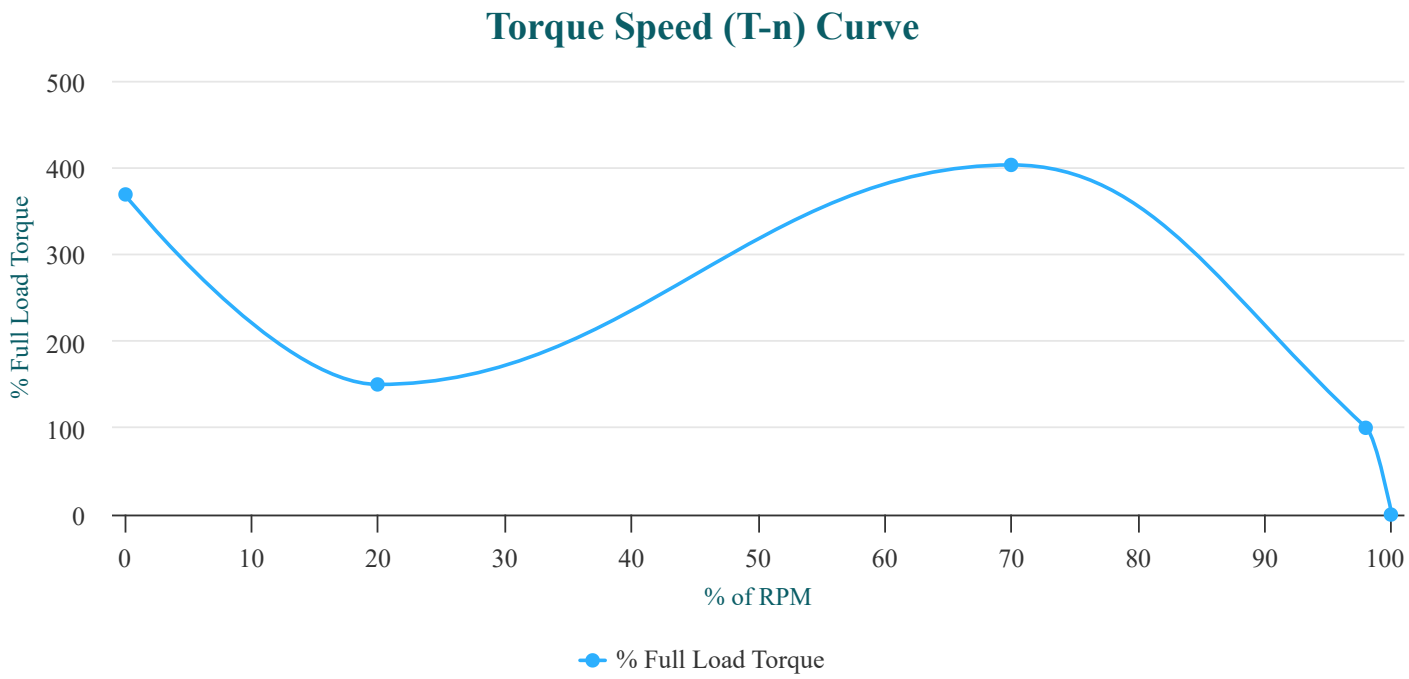

PERFORMANCE LOAD VALUES, HIGH VOLTAGE, 60Hz

TORQUE VALUES	TORQUE (lb-ft)	TORQUE (% FULL LOAD)
Locked Rotor Torque	1085.7	369
Pull-Up Torque	441.5	150
Breakdown Torque	1185.7	403
Full Load Torque	294.2	100

TYPICAL PERFORMANCE - NOT GUARANTEED VALUES

PERFORMANCE VALUES	
Start Configuration	DOL
Starting Current (A)	2218
No-Load Current (A)	56.3
No-Load Power Factor	0.11

% OF RATED LOAD	25	50	75	100	125	S.F. 1.15
Line Amperes (A)	80.3	122.2	169.1	219.7	273.1	251.8
Efficiency (%)	88.3	93	94.4	94.8	94.7	94.8
Speed (r/min)	3595	3591	3586	3581	3576	3577
Power Factor (cosΦ)	0.66	0.83	0.89	0.9	0.91	0.91
Input Power (kW)	42.45	80.62	119.23	158.31	197.91	182.5

NEMA

Model GRC2002E

MFG PN: T447T 200U2B

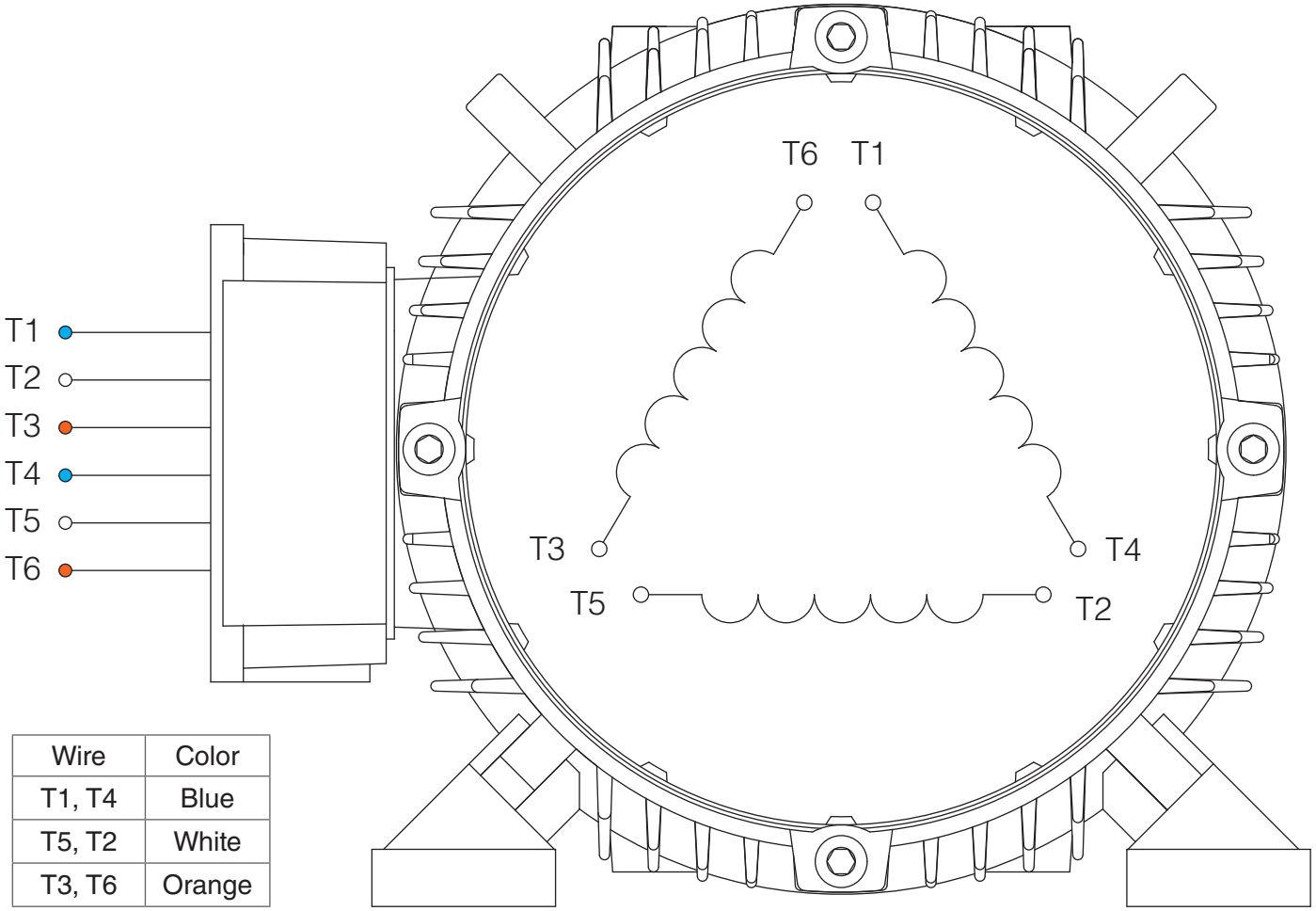

Wire	Color
T1, T4	Blue
T5, T2	White
T3, T6	Orange

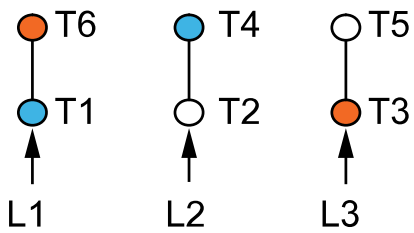

SINGLE VOLTAGE

NOTES:

1. CCW ROTATION FACING ODE FOR CONNECTIONS SHOWN
2. TO REVERSE ROTATION, SWAP ANY TWO INPUT LINES
3. WHEN MOTOR IS IN F1 POSITION, LEADS INDICATED WITH "*" EXIT THE CASING ABOVE THE CENTER LINE OF THE MOTOR, THE REMAINING LEADS EXIT BELOW THE CENTER LINE
4. LEADS MUST BE NUMBERED AND COLORED AS SHOWN
5. DIAGRAMS FOR REFERENCE ONLY

TECHTOP
You can't top a Techtop.

NEMA 3Ø D 6-Lead Single Voltage

DRAWING NUMBER:	NEMA-3-6-D
CONNECTION:	D
NUMBER OF LEADS:	6
THERMAL PROTECTION:	-

ISSUED DATE	06/06/25

PREMIUM T-FRAME CAST IRON MOTORS

NEMA

Model GRC2002E

MFG PN: T447T 200U2B

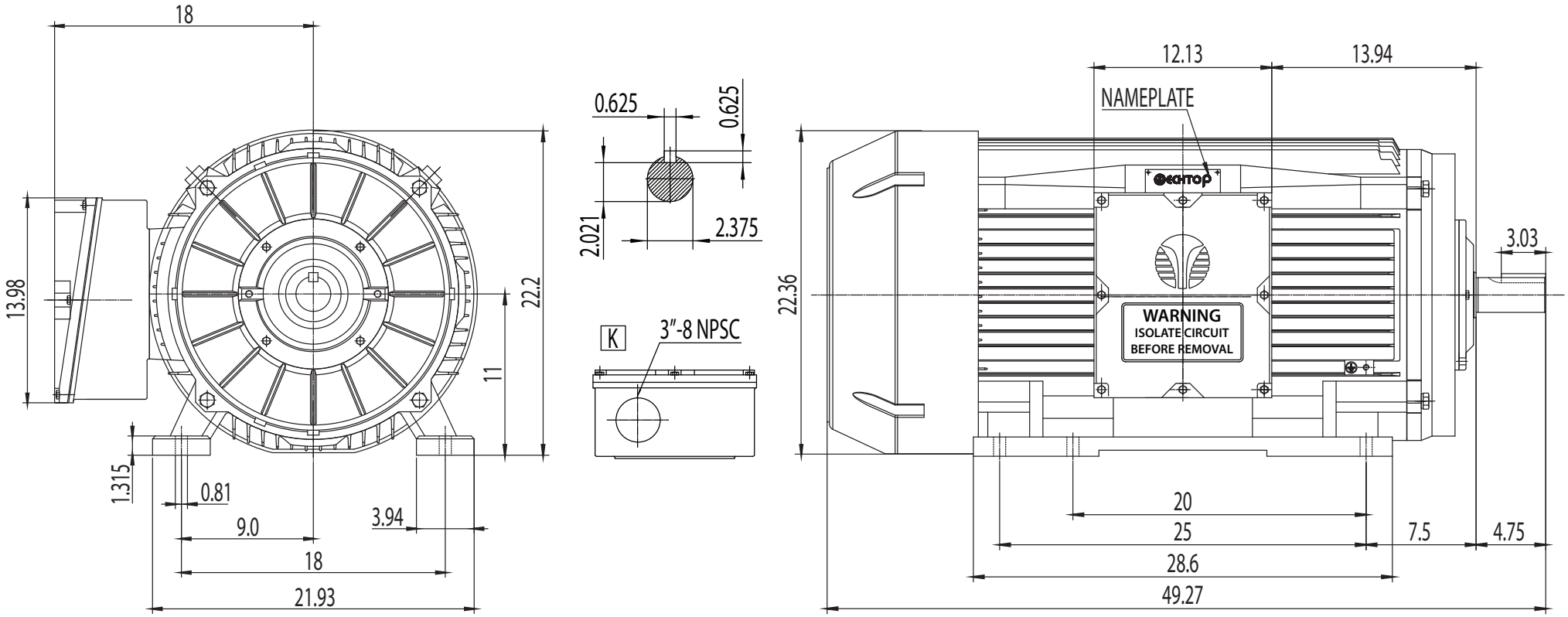

TECHTOP
You can't top a Techtop.

NEMA Premium TEFC 447TS

DRAWING NUMBER:	GR3-CI-TF-447(9)TS-CFC	ISSUED DATE	06/06/25
DIMENSIONS:	Inches		
MOUNTING:	Rigid	PREMIUM T-FRAME CAST IRON MOTORS	
CASING MATERIAL:	Cast Iron		