TECHTOP

NEMA | **Model GRC0056F**
MFG PN: T215T5U6B

Model **GRC0056F**

Product Data Package

MODEL	HP	RPM	VOLTAGE	PHASE	Hz	FRAME	MOUNT	ENCLOSURE
GRC0056F	5	1175	575	3	60	215T	Rigid	TEFC

Toronto

TOLL FREE 1.888.286.1820
PHONE 905.829.1001
EMAIL info@techtopcanada.com

Montreal

TOLL FREE 1.844.354.5111
PHONE 514.354.1002
EMAIL infoQC@techtopcanada.com

Moncton

PHONE 506.386.5794
EMAIL infoNB@techtopcanada.com

Winnipeg

PHONE 204.633.2779
EMAIL infoMB@techtopcanada.com

Vancouver

PHONE 604.525.1551
EMAIL infoBC@techtopcanada.com

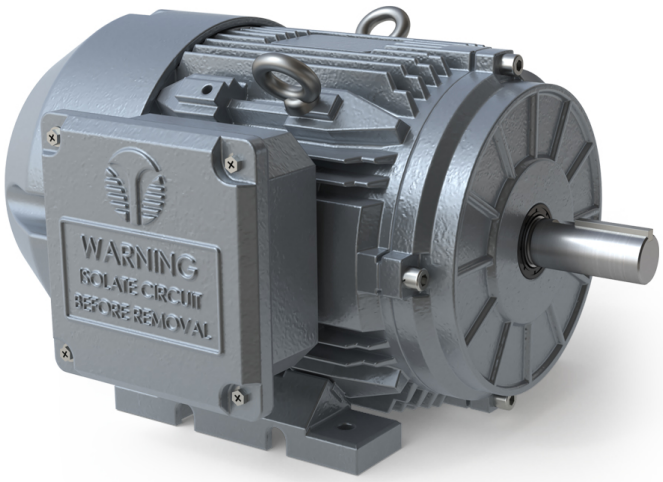

Index

Motor General Data Sheet P 2
Nameplate Information P 3
Technical Performance Data P 4
Motor General Wiring Diagram P 5
Motor General Outline Drawing P 6

NEMA | Model GRC0056F

MFG PN: T215T5U6B

ELECTRICAL DATA		
Rated Motor Output Power	5	HP
	-	kW
Rated Motor Speed	1175	r/min 60Hz
	-	r/min 50Hz
Rated Motor Voltage (+/-10%)	575	V/60Hz
	-	V/50Hz
Rated Motor Current	5.51	A (I_n) @ 60Hz
	-	A (I_n) @ 50Hz
Phase	3	Ø
Locked Rotor Current @ High Voltage	41.53	A (I_n) @ 60Hz
FI Current @ 208V	-	A (I_n) @ 60Hz
Service Factor	1.25	@ 60Hz
	1	@ 50Hz
KVA Code	K	60Hz
	-	50Hz
Nominal Efficiency	89.5	% @ 60Hz
Nominal Power Factor	0.76	cosΦ @ 60Hz
Leads (Qty, Size)	3	14
Connection	Y	–
Coil Resistance	2.108	Ω
Start Capacitor	-	µF/V
Run Capacitor	-	µF/V
VFD DUTY (S.F. 1.0)	**RATIO**	**Hz**
Variable Torque	30:1	2 - 60
Constant Torque	15:1	4 - 60
FULL LOAD TEMPERATURE RISE		
Full Load Temperature Rise	36.4	°C @ 60Hz
	48.4	°C @ 50Hz

GENERAL DATA		
Frame Size	215T	
Enclosure	TEFC	
Mounting	Rigid	
Approximate Weight (lbs.)	181.8 lbs.	
Casing Material / Fan Cover	Cast Iron	Cast Iron
Shaft Material	-	
NEMA Design	A	
Degree of Protection (IP)	55	
Insulation Class / Temp Rise (60Hz)	F	B
Tropicalization	YES	
Duty	Cont. / S1	
Conduit Box Location	F1	
Feet Removable / Double Drilled	YES	NO
Paintwork	7024	
	Graphite Gray	
MECHANICAL DATA		
Bearing DE Side	6308 ZZ	
Bearing ODE Side	6308 ZZ	
Grease Type	Mobil Polyrex EM	
Compensation Ring (wavy washer)	NDE	
Moment of Inertia (lb-ft^2)	1.16	
Sound Pressure @ 3 FT dBA	62.8	
SITE CONDITIONS		
Ambient Temperature (°C)	40	
Meters Above Sea Level (MASL)	1000	
HAZARDOUS LOCATIONS		
CSA Certified	A, B, C & D	
Temperature Code	T3A	-

Questions? **Call 1.888.286.1820**

NEMA | Model GRC0056F

MFG PN: T215T5U6B

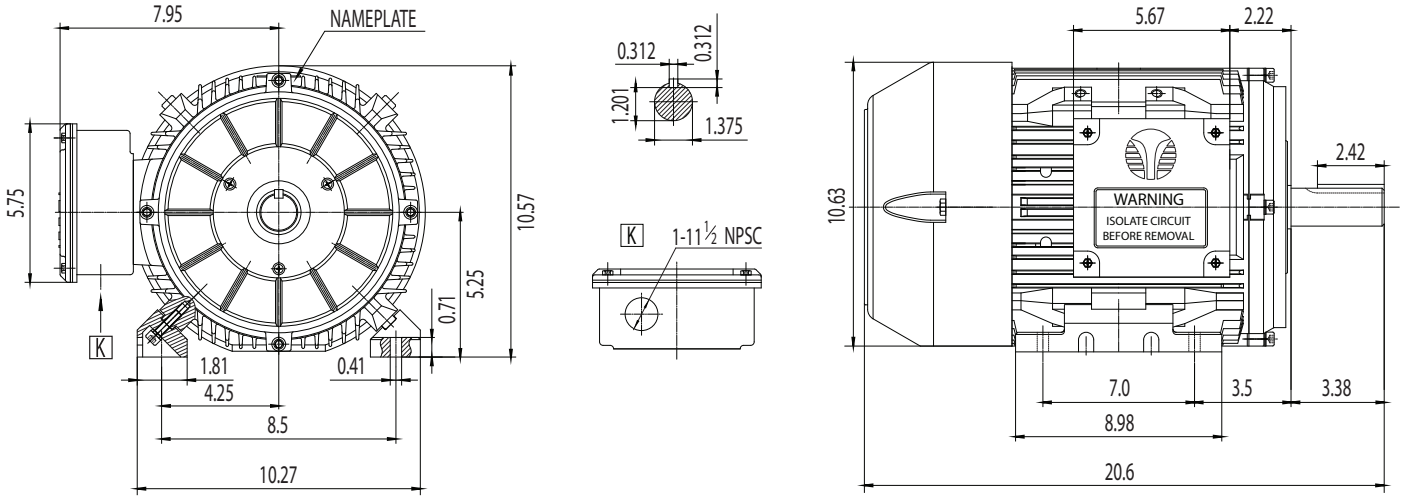

NAMEPLATE DATA	60Hz	50Hz
Horse Power	5	5
RPM	1175	-
Voltage	575	-
Full Load Amps	5.51	-
Service Factor	1.25	1
KVA Code	K	-
Full Load Amps (208V)	-	-
Nominal Efficiency	89.5	-
Nominal Power Factor	0.76	-
Design	A	
Frame	215T	
Enclosure Type	TEFC	
IP Rating	55	
Duty	Cont. / S1	
Insulation Class	F	
Ambient Rating	40	
Drive End Bearing	6308 ZZ	
Opposite Drive End Bearing	6308 ZZ	
Weight (lbs)	181.8	

NAMEPLATE LAYOUT

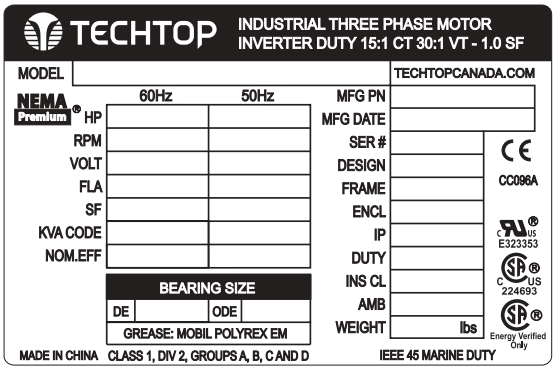

VFD DUTY (S.F. 1.0)	RATIO	Hz*
Variable Torque	30:1	2 - 60
Constant Torque	15:1	4 - 60

*For max speed please contact Techtop Canada

HAZARDOUS LOCATIONS	CSA CERTIFIED
Class / Division	Class I, Div. 2
Groups	A, B, C & D

Questions? **Call 1.888.286.1820**

NEMA

Model GRC0056F

MFG PN: T215T5U6B

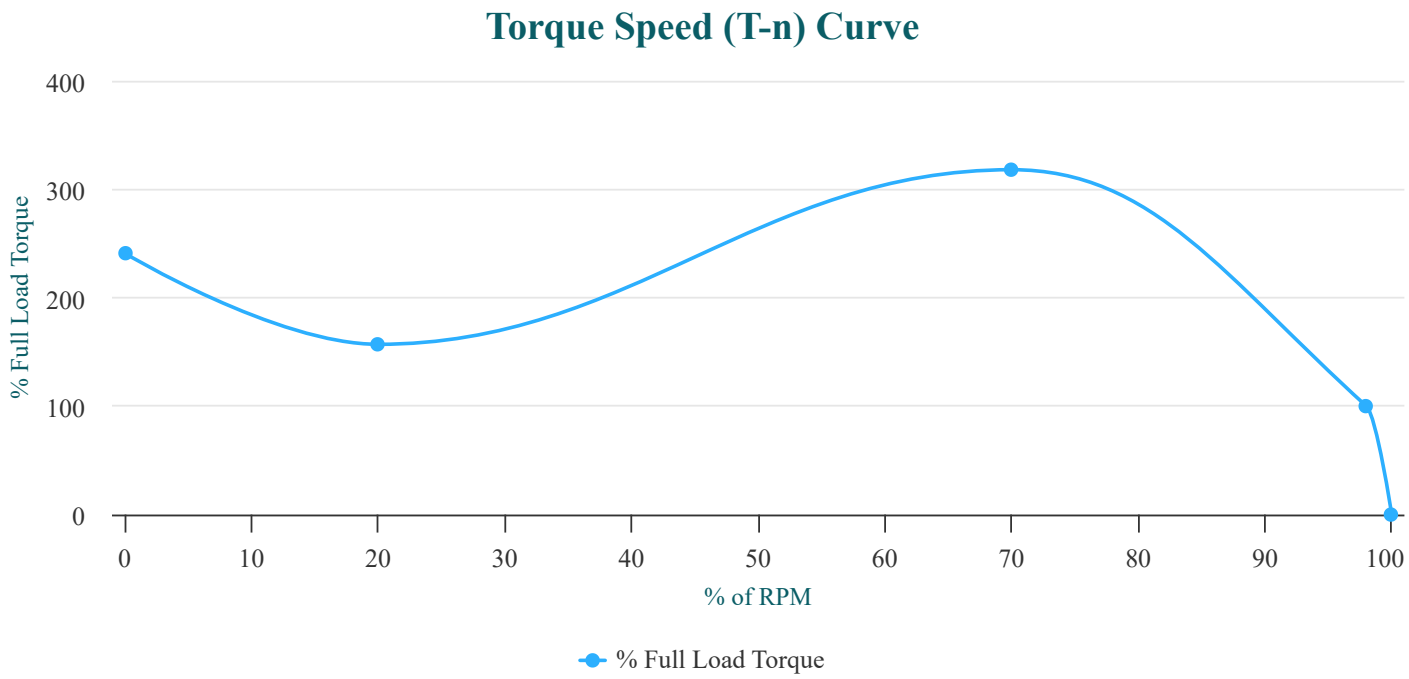

PERFORMANCE LOAD VALUES, HIGH VOLTAGE, 60Hz

TORQUE VALUES	TORQUE (lb-ft)	TORQUE (% FULL LOAD)
Locked Rotor Torque	53.9	241
Pull-Up Torque	35.1	157
Breakdown Torque	71.1	318
Full Load Torque	22.3	100

TYPICAL PERFORMANCE - NOT GUARANTEED VALUES

PERFORMANCE VALUES	
Start Configuration	DOL
Starting Current (A)	41.53
No-Load Current (A)	2.9
No-Load Power Factor	0.06

% OF RATED LOAD	25	50	75	100	125	S.F. 1.25
Line Amperes (A)	3.1	3.6	4.4	5.4	6.6	6.6
Efficiency (%)	83.4	89.1	90.3	90.2	89.4	89.4
Speed (r/min)	1194	1189	1183	1176	1169	1169
Power Factor (cosΦ)	0.36	0.57	0.7	0.76	0.79	0.79
Input Power (kW)	1.11	2.08	3.07	4.1	5.18	5.18

NEMA

Model GRC0056F

MFG PN: T215T5U6B

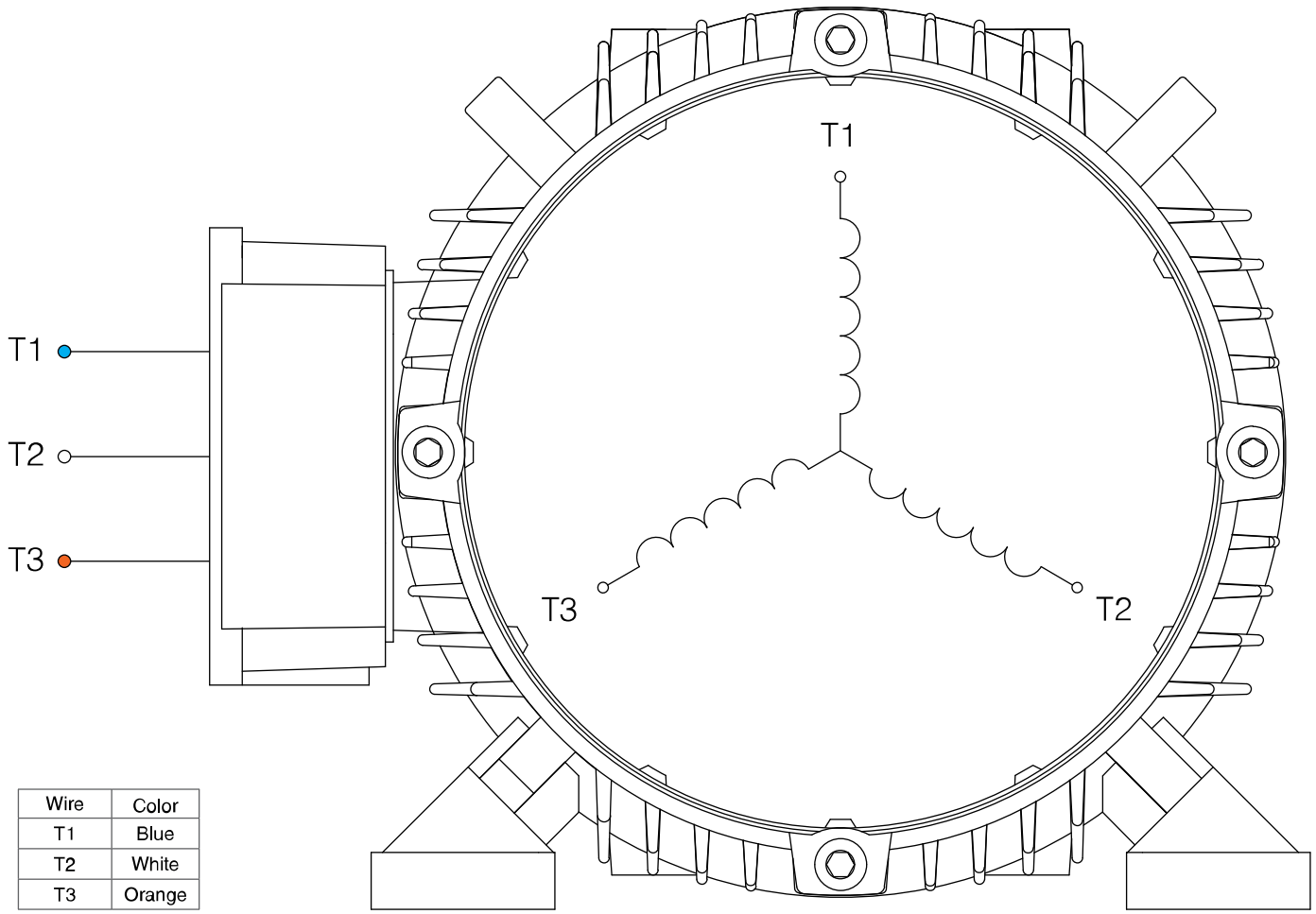

Wire	Color
T1	Blue
T2	White
T3	Orange

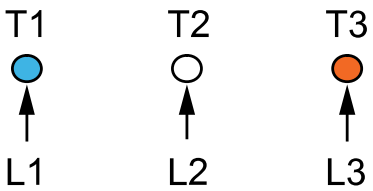

SINGLE VOLTAGE

NOTES:

1. CCW ROTATION FACING ODE FOR CONNECTIONS SHOWN
2. TO REVERSE ROTATION, SWAP ANY TWO INPUT LINES
3. WHEN MOTOR IS IN F1 POSITION, LEADS INDICATED WITH "*" EXIT THE CASING ABOVE THE CENTER LINE OF THE MOTOR, THE REMAINING LEADS EXIT BELOW THE CENTER LINE
4. LEADS MUST BE NUMBERED AND COLORED AS SHOWN
5. DIAGRAMS FOR REFERENCE ONLY

TECHTOP
You can't top a Techtop.

NEMA 3Ø Y 3-Lead Single Voltage

DRAWING NUMBER:	NEMA-3-3-Y
CONNECTION:	Y
NUMBER OF LEADS:	3
THERMAL PROTECTION:	-

ISSUED DATE	05/05/25

PREMIUM T-FRAME CAST IRON MOTORS

NEMA

Model GRC0056F

MFG PN: T215T5U6B

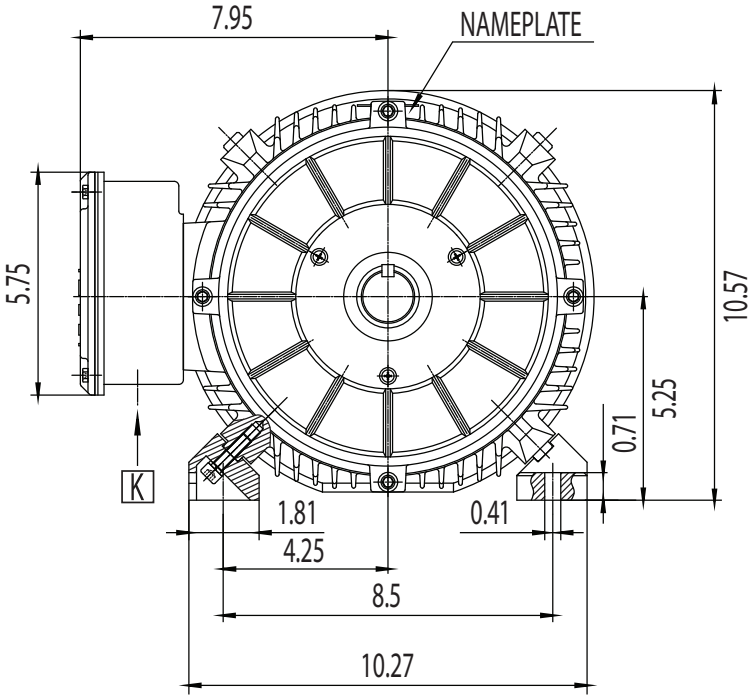

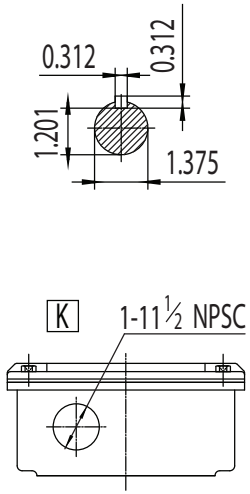

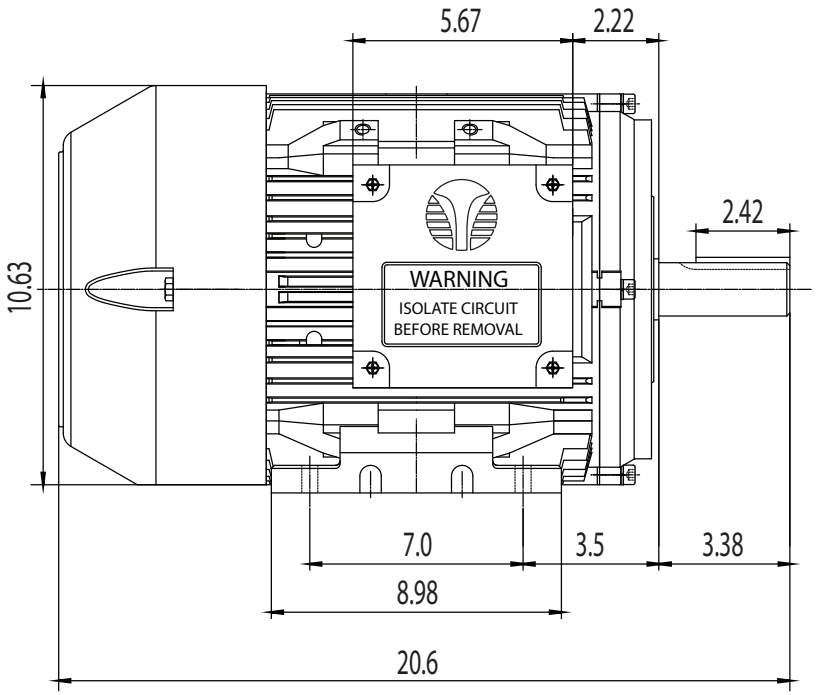

TECHTOP
You can't top a Techtop.

NEMA Premium TEFC 215T

DRAWING NUMBER:	GR3-CI-TF-215T-CFC	ISSUED DATE	05/05/25
DIMENSIONS:	Inches		
MOUNTING:	Rigid	PREMIUM T-FRAME CAST IRON MOTORS	
CASING MATERIAL:	Cast Iron		