# DATA SHEET

## Three Phase Induction Motor - Squirrel Cage

Customer :

| | | | |
|---|---|---|---|
| Product line | : W22 NEMA Premium Efficiency Three-Phase | Product code : | 12448181 |
| | | Catalog # : | HT040402NPW22 |

| | | | |
|---|---|---|---|
| Frame | : 324/6TS | Locked rotor time | : 39s (cold) 22s (hot) |
| Output | : 40 HP (30 kW) | Temperature rise | : 80 K |
| Poles | : 2 | Duty cycle | : Cont.(S1) |
| Frequency | : 60 Hz | Ambient temperature | : -20°C to +40°C |
| Rated voltage | : 230/460 V | Altitude | : 1000 m.a.s.l. |
| Rated current | : 95.9/47.9 A | Protection degree | : IP55 |
| L. R. Amperes | : 604/302 A | Cooling method | : IC411 - TEFC |
| LRC | : 6.3x(Code G) | Mounting | : F-1 |
| No load current | : 31.0/15.5 A | Rotation¹ | : Both (CW and CCW) |
| Rated speed | : 3560 rpm | Noise level² | : 76.0 dB(A) |
| Slip | : 1.11 % | Starting method | : Direct On Line |
| Rated torque | : 59.0 ft.lb | Approx. weight³ | : 547 lb |
| Locked rotor torque | : 229 % | | |
| Breakdown torque | : 250 % | | |
| Insulation class | : F | | |
| Service factor | : 1.25 | | |
| Moment of inertia (J) | : 4.90 sq.ft.lb | | |
| Design | : B | | |

| Output | 25% | 50% | 75% | 100% |
|---|---|---|---|---|
| Efficiency (%) | 0.000 | 91.7 | 92.4 | 92.4 |
| Power Factor | 0.00 | 0.74 | 0.82 | 0.85 |

| Foundation loads | |
|---|---|
| Max. traction | : 423 lb |
| Max. compression | : 886 lb |

Losses at normative operating points (speed;torque), in percentage of rated output power

| P1 (0,9;1,0) | P2 (0,5;1,0) | P3 (0,25;1,0) | P4 (0,9;0,5) | P5 (0,5;0,5) | P6 (0,5;0,25) | P7 (0,25;0,25) |
|---|---|---|---|---|---|---|
| 7.9 | 5.3 | 4.4 | 5.3 | 2.9 | 2.3 | 1.4 |

| | | Drive end | Non drive end |
|---|---|---|---|
| Bearing type | : | 6312 C3 | 6212 C3 |
| Sealing | : | V'Ring | V'Ring |
| Lubrication interval | : | 12000 h | 15000 h |
| Lubricant amount | : | 21 g | 13 g |
| Lubricant type | : | Mobil Polyrex EM | |

Notes
USABLE @208V 101A SF 1.10 SFA 111A

This revision replaces and cancel the previous one, which must be eliminated.
(1) Looking the motor from the shaft end.
(2) Measured at 1m and with tolerance of +3dB(A).
(3) Approximate weight subject to changes after manufacturing process.
(4) At 100% of full load.

These are average values based on tests with sinusoidal power supply, subject to the tolerances stipulated in NEMA MG-1.

| Rev. | Changes Summary | Performed | Checked | Date |
|---|---|---|---|---|
| | | | | |

| | | | | |
|---|---|---|---|---|
| Performed by | | | | |
| Checked by | | | Page | Revision |
| Date | 30/07/2026 | | 1 / 6 | |

This document is exclusive property of WEG S/A. Reprinting is not allowed without written authorization of WEG S/A.
Subject to change without notice

# TORQUE AND CURRENT VS SPEED CURVE

## Three Phase Induction Motor - Squirrel Cage

| | | | |
|---|---|---|---|
| Customer | : | | |
| Product line | : W22 NEMA Premium Efficiency Three-Phase | Product code : | 12448181 |
| | | Catalog # : | HT040402NPW22 |

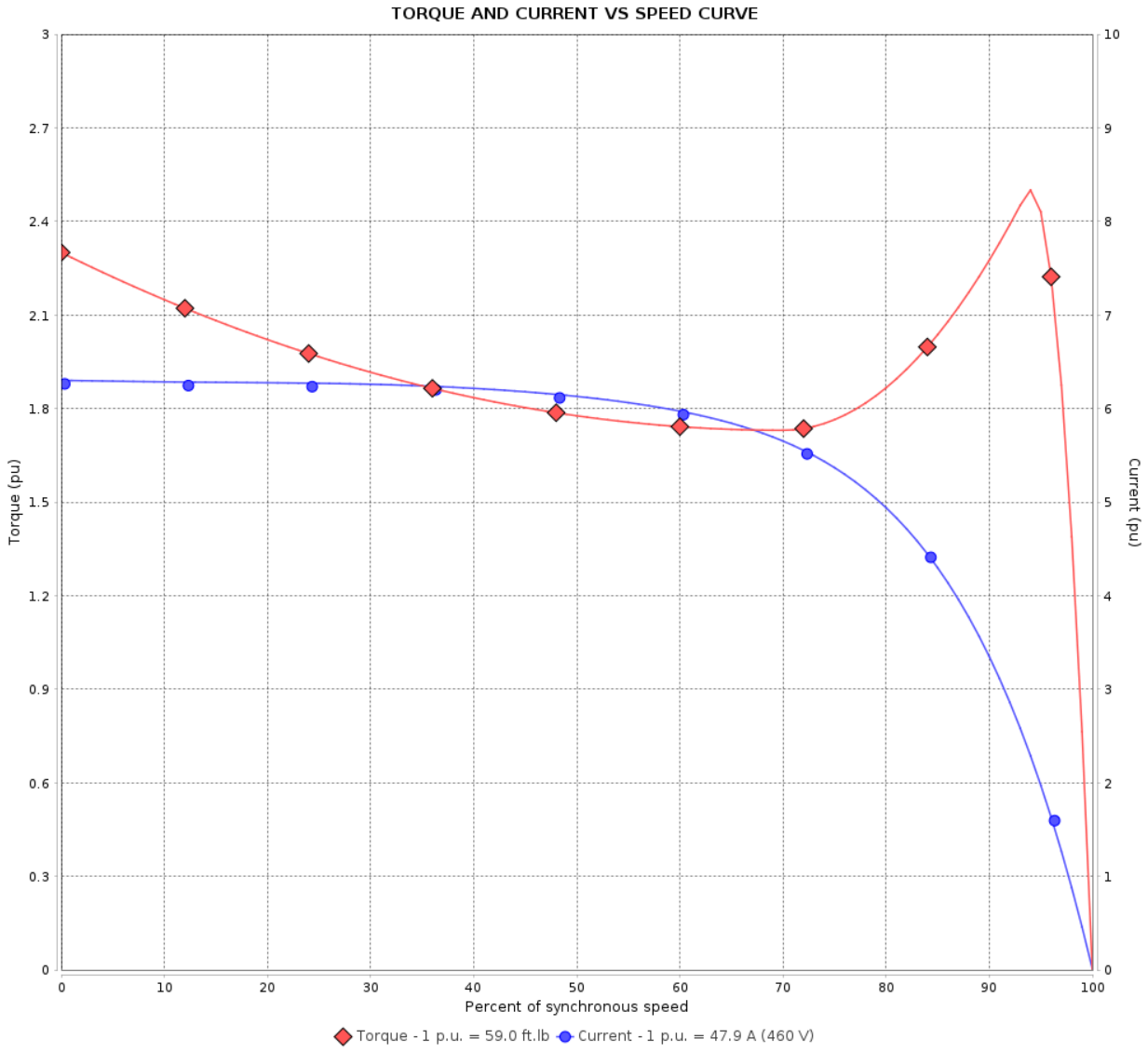


| | | | |
|---|---|---|---|
| Performance | : 230/460 V 60 Hz 2P | | |
| Rated current | : 95.9/47.9 A | Moment of inertia (J) | : 4.90 sq.ft.lb |
| LRC | : 6.3 | Duty cycle | : Cont.(S1) |
| Rated torque | : 59.0 ft.lb | Insulation class | : F |
| Locked rotor torque | : 229 % | Service factor | : 1.25 |
| Breakdown torque | : 250 % | Temperature rise | : 80 K |
| Rated speed | : 3560 rpm | Design | : B |
| Locked rotor time | : 39s (cold) 22s (hot) | | |

| Rev. | Changes Summary | Performed | Checked | Date |
|---|---|---|---|---|
| | | | | |

| | | | | |
|---|---|---|---|---|
| Performed by | | | | |
| Checked by | | | Page | Revision |
| Date | 30/07/2026 | | 2 / 6 | |

This document is exclusive property of WEG S/A. Reprinting is not allowed without written authorization of WEG S/A.
Subject to change without notice

# LOAD PERFORMANCE CURVE

## Three Phase Induction Motor - Squirrel Cage

Customer :

| | | | |
|---|---|---|---|
| Product line | : W22 NEMA Premium Efficiency Three-Phase | Product code : | 12448181 |
| | | Catalog # : | HT040402NPW22 |

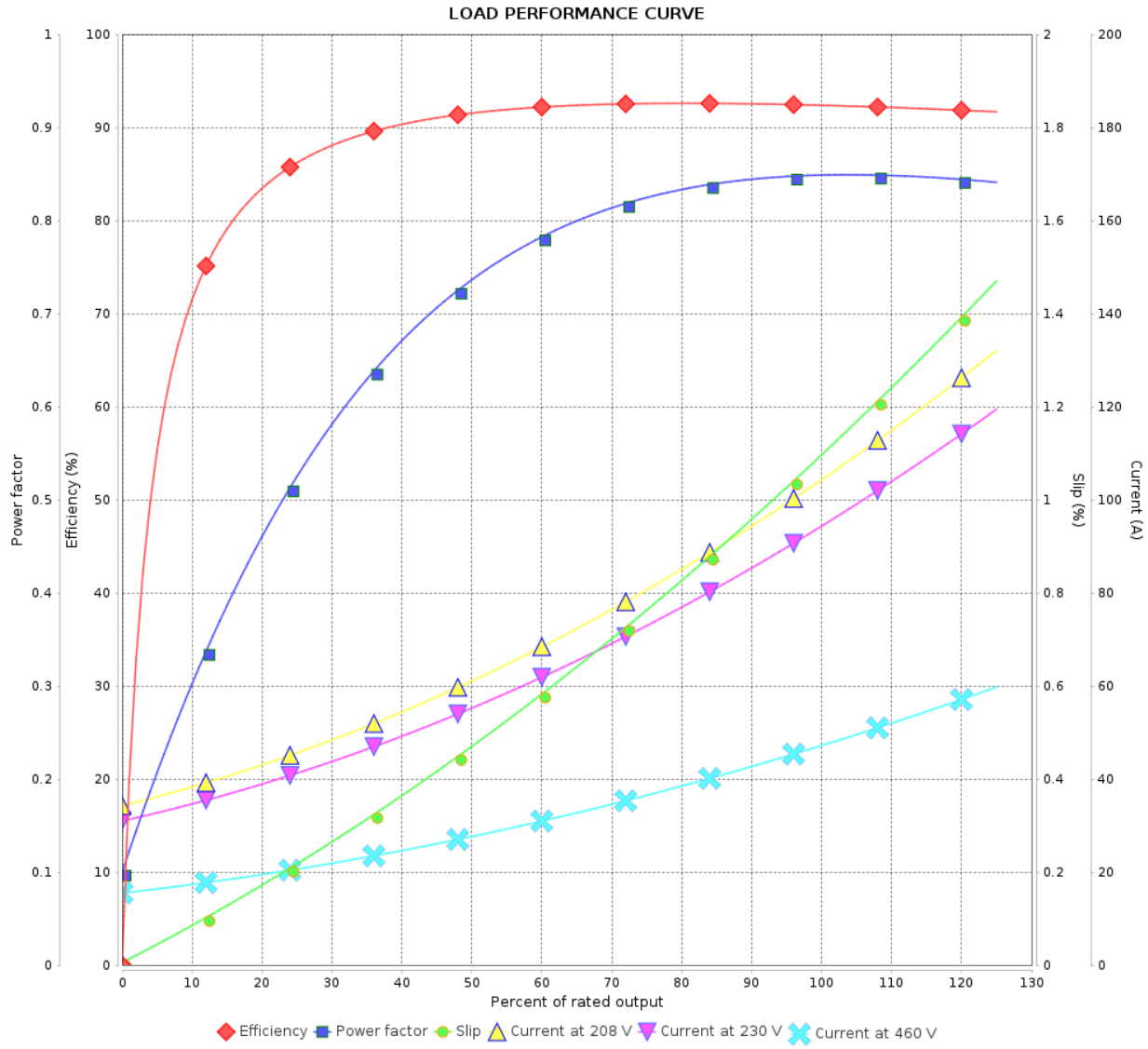


| | |
|---|---|
| Performance | : 230/460 V 60 Hz 2P |

| | | | |
|---|---|---|---|
| Rated current | : 95.9/47.9 A | Moment of inertia (J) | : 4.90 sq.ft.lb |
| LRC | : 6.3 | Duty cycle | : Cont.(S1) |
| Rated torque | : 59.0 ft.lb | Insulation class | : F |
| Locked rotor torque | : 229 % | Service factor | : 1.25 |
| Breakdown torque | : 250 % | Temperature rise | : 80 K |
| Rated speed | : 3560 rpm | Design | : B |

| Rev. | Changes Summary | Performed | Checked | Date |
|---|---|---|---|---|
| | | | | |

| | | | | |
|---|---|---|---|---|
| Performed by | | | | |
| Checked by | | | Page | Revision |
| Date | 30/07/2026 | | 3 / 6 | |

This document is exclusive property of WEG S/A. Reprinting is not allowed without written authorization of WEG S/A.
Subject to change without notice

# THERMAL LIMIT CURVE

## Three Phase Induction Motor - Squirrel Cage

Customer :

| | | | |
|---|---|---|---|
| Product line | : W22 NEMA Premium Efficiency Three-Phase | Product code : | 12448181 |
| | | Catalog # : | HT040402NPW22 |

Performance : 230/460 V 60 Hz 2P

| | | | |
|---|---|---|---|
| Rated current | : 95.9/47.9 A | Moment of inertia (J) | : 4.90 sq.ft.lb |
| LRC | : 6.3 | Duty cycle | : Cont.(S1) |
| Rated torque | : 59.0 ft.lb | Insulation class | : F |
| Locked rotor torque | : 229 % | Service factor | : 1.25 |
| Breakdown torque | : 250 % | Temperature rise | : 80 K |
| Rated speed | : 3560 rpm | Design | : B |

Heating constant

Cooling constant

| Rev. | Changes Summary | Performed | Checked | Date |
|---|---|---|---|---|
| | | | | |

| | | | | |
|---|---|---|---|---|
| Performed by | | | | |
| Checked by | | | Page | Revision |
| Date | 30/07/2026 | | 4 / 6 | |

This document is exclusive property of WEG S/A. Reprinting is not allowed without written authorization of WEG S/A.
Subject to change without notice

# THERMAL LIMIT CURVE

## Three Phase Induction Motor - Squirrel Cage

Customer :

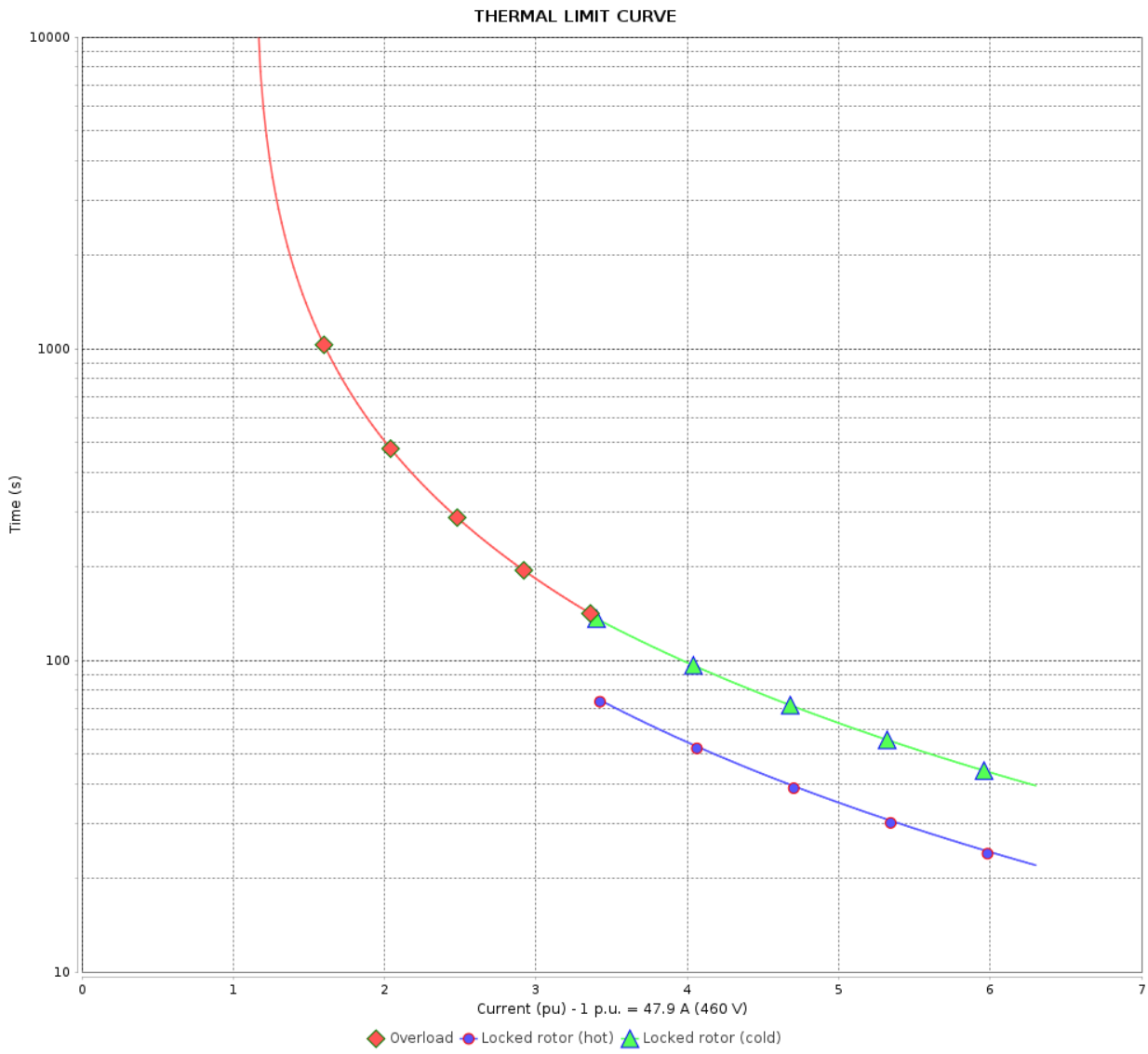


| Rev. | Changes Summary | Performed | Checked | Date |
|---|---|---|---|---|
| | | | | |

| | | | | |
|---|---|---|---|---|
| Performed by | | | | |
| Checked by | | | Page | Revision |
| Date | 30/07/2026 | | 5 / 6 | |

This document is exclusive property of WEG S/A. Reprinting is not allowed without written authorization of WEG S/A.
Subject to change without notice

# VFD OPERATION CURVE

## Three Phase Induction Motor - Squirrel Cage

Customer :

| | | | |
|---|---|---|---|
| Product line | : W22 NEMA Premium Efficiency Three-Phase | Product code : | 12448181 |
| | | Catalog # : | HT040402NPW22 |

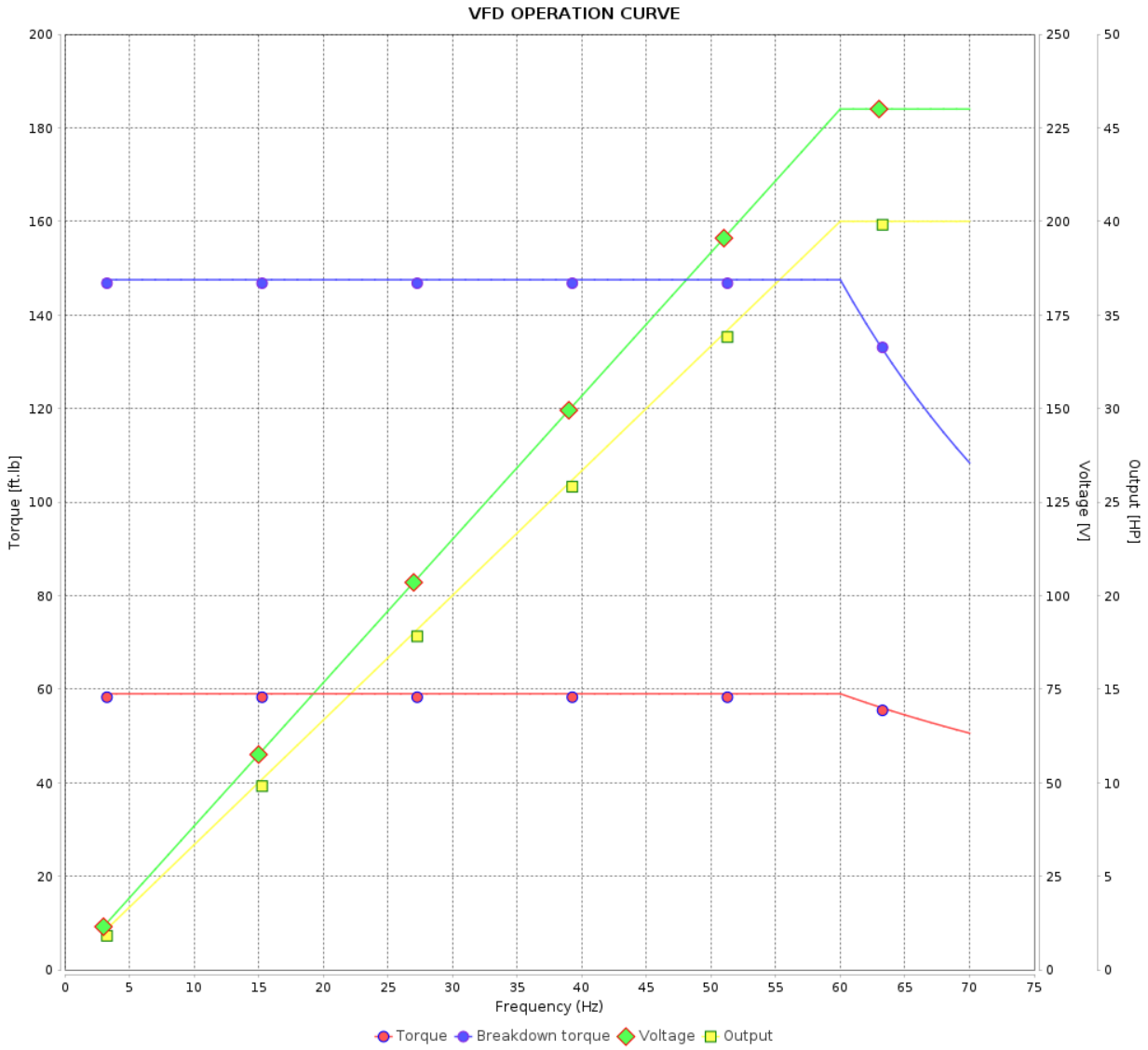


| | |
|---|---|
| Performance | : 230/460 V 60 Hz 2P |

| | | | |
|---|---|---|---|
| Rated current | : 95.9/47.9 A | Moment of inertia (J) | : 4.90 sq.ft.lb |
| LRC | : 6.3 | Duty cycle | : Cont.(S1) |
| Rated torque | : 59.0 ft.lb | Insulation class | : F |
| Locked rotor torque | : 229 % | Service factor | : 1.25 |
| Breakdown torque | : 250 % | Temperature rise | : 80 K |
| Rated speed | : 3560 rpm | Design | : B |

| Rev. | Changes Summary | Performed | Checked | Date |
|---|---|---|---|---|
| | | | | |

| | | | | |
|---|---|---|---|---|
| Performed by | | | | |
| Checked by | | | Page | Revision |
| Date | 30/07/2026 | | 6 / 6 | |

This document is exclusive property of WEG S/A. Reprinting is not allowed without written authorization of WEG S/A.
Subject to change without notice

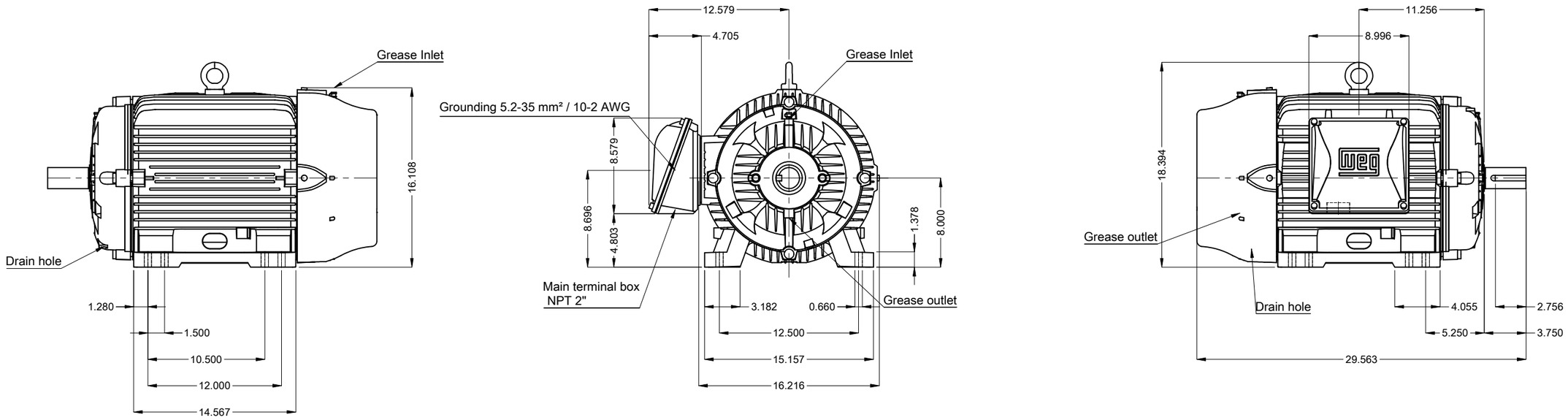


DE Shaft End

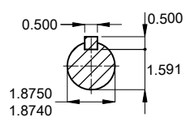


Without vertical jackscrews
Color RAL 5009
Painting plan 203A
Mounting B3R(D)

40 HP 02 Poles 60 Hz | A

Scale 1 : 10

| ECM | LOC | SUMMARY OF MODIFICATIONS | EXECUTED | CHECKED | RELEASED | DATE | VER |
|---|---|---|---|---|---|---|---|
| | | | HYBRISUSER | | | | 00 |

| | |
|---|---|
| EXECUTED | HYBRISUSER |
| CHECKED | |
| RELEASED | |
| REL. DATE | |

THREE PH. MOTOR W22 NEMA PREM. EFF.
FRAME 324/6TS IP55 TEFC

PREVIEW

WDD 00

SHEET 1 / 1

Dimensions in inches

A3

WEG's property. Forbidden reproduction without previous authorization.