DATA SHEET

Three Phase Induction Motor - Squirrel Cage

Customer :

Product line : W22 NEMA Premium Efficiency Three-Phase

Product code : 11416668

Frame	: 182/4T	Cooling method	: IC411 - TEFC
Insulation class	: F	Mounting	: F-1
Duty cycle	: Cont.(S1)	Rotation¹	: Both (CW and CCW)
Ambient temperature	: -20°C to +40°C	Starting method	: Direct On Line
Altitude	: 1000 m.a.s.l.	Approx. weight³	: 44.1 kg
Protection degree	: IP55	Moment of inertia (J)	: 0.0169 kgm²
Design	: B		

Output [HP]	5	4	4	4	5	5	5
Poles	4	4	4	4	4	4	4
Frequency [Hz]	60	50	50	50	50	50	50
Rated voltage [V]	230/460	380	400	415	380	400	415
Rated current [A]	13.0/6.49	6.42	6.21	6.23	7.74	7.44	7.35
L. R. Amperes [A]	97.4/48.7	44.9	47.8	51.1	44.9	47.6	50.7
LRC [A]	7.5x(Code J)	7.0x(Code J)	7.7x(Code K)	8.2x(Code L)	5.8x(Code G)	6.4x(Code H)	6.9x(Code J)
No load current [A]	5.80/2.90	2.80	3.10	3.30	2.80	3.10	3.30
Rated speed [RPM]	1750	1455	1455	1460	1430	1440	1445
Slip [%]	2.78	3.00	3.00	2.67	4.67	4.00	3.67
Rated torque [kgfm]	2.07	2.00	2.00	1.99	2.54	2.52	2.51
Locked rotor torque [%]	229	229	260	290	185	210	229
Breakdown torque [%]	290	300	320	350	225	250	270
Service factor	1.25	1.15	1.15	1.15	1.15	1.15	1.15
Temperature rise	80 K	80 K	80 K	80 K	80 K	80 K	80 K
Locked rotor time	27s (cold) 15s (hot)	21s (cold) 12s (hot)	21s (cold) 12s (hot)	21s (cold) 12s (hot)	21s (cold) 12s (hot)	21s (cold) 12s (hot)	21s (cold) 12s (hot)
Noise level²	56.0 dB(A)	56.0 dB(A)	56.0 dB(A)	56.0 dB(A)	56.0 dB(A)	56.0 dB(A)	56.0 dB(A)
Efficiency (%) 25%	0.000				0.000		
Efficiency (%) 50%	88.5	87.5	86.7	86.5	88.5	87.5	87.5
Efficiency (%) 75%	89.5	88.2	88.2	88.2	87.5	88.5	88.5
Efficiency (%) 100%	89.5	87.7	88.2	88.2	86.5	87.5	87.5
Power Factor 25%	0.00				0.00		
Power Factor 50%	0.62	0.61	0.57	0.53	0.69	0.65	0.61
Power Factor 75%	0.74	0.75	0.71	0.67	0.80	0.77	0.74
Power Factor 100%	0.80	0.81	0.79	0.76	0.84	0.82	0.80

Losses at normative operating points (speed;torque), in percentage of rated output power

Losses (%)	P1 (0,9;1,0)	11.2	13.4	12.8	12.8	14.9	13.6	13.6
	P2 (0,5;1,0)	9.4	11.2	10.7	10.7	12.5	11.4	11.4
	P3 (0,25;1,0)	8.7	10.3	9.9	9.9	11.5	10.5	10.5
	P4 (0,9;0,5)	5.3	6.4	6.1	6.1	7.1	6.5	6.5
	P5 (0,5;0,5)	3.7	4.4	4.2	4.2	4.9	4.4	4.4
	P6 (0,5;0,25)	2.4	2.9	2.7	2.7	3.2	2.9	2.9
	P7 (0,25;0,25)	1.7	2.1	2.0	2.0	2.3	2.1	2.1

		Drive end	Non drive end
Bearing type	:	6207 ZZ	6206 ZZ
Sealing	:	V'Ring	V'Ring
Lubrication interval	:	-	-
Lubricant amount	:	-	-
Lubricant type	:	Mobil Polyrex EM	

Foundation loads

Max. traction : 120 kgf

Max. compression : 164 kgf

This revision replaces and cancel the previous one, which must be eliminated.

(1) Looking the motor from the shaft end.

These are average values based on tests with sinusoidal power supply, subject to the tolerances stipulated in NEMA MG-1.

Rev.	Changes Summary	Performed	Checked	Date

Performed by				
Checked by			Page	Revision
Date	20/10/2024		1 / 9	

This document is exclusive property of WEG S/A. Reprinting is not allowed without written authorization of WEG S/A.
Subject to change without notice

DATA SHEET

Three Phase Induction Motor - Squirrel Cage

Customer :

Notes
USABLE @208V 14.3A SF 1.15 SFA 16.4A

Rev.	Changes Summary	Performed	Checked	Date

Performed by				
Checked by			Page	Revision
Date	20/10/2024		2 / 9	

This document is exclusive property of WEG S/A. Reprinting is not allowed without written authorization of WEG S/A.
Subject to change without notice

LOAD PERFORMANCE CURVE

Three Phase Induction Motor - Squirrel Cage

Customer :

Product line : W22 NEMA Premium Efficiency Three-Phase

Product code : 11416668

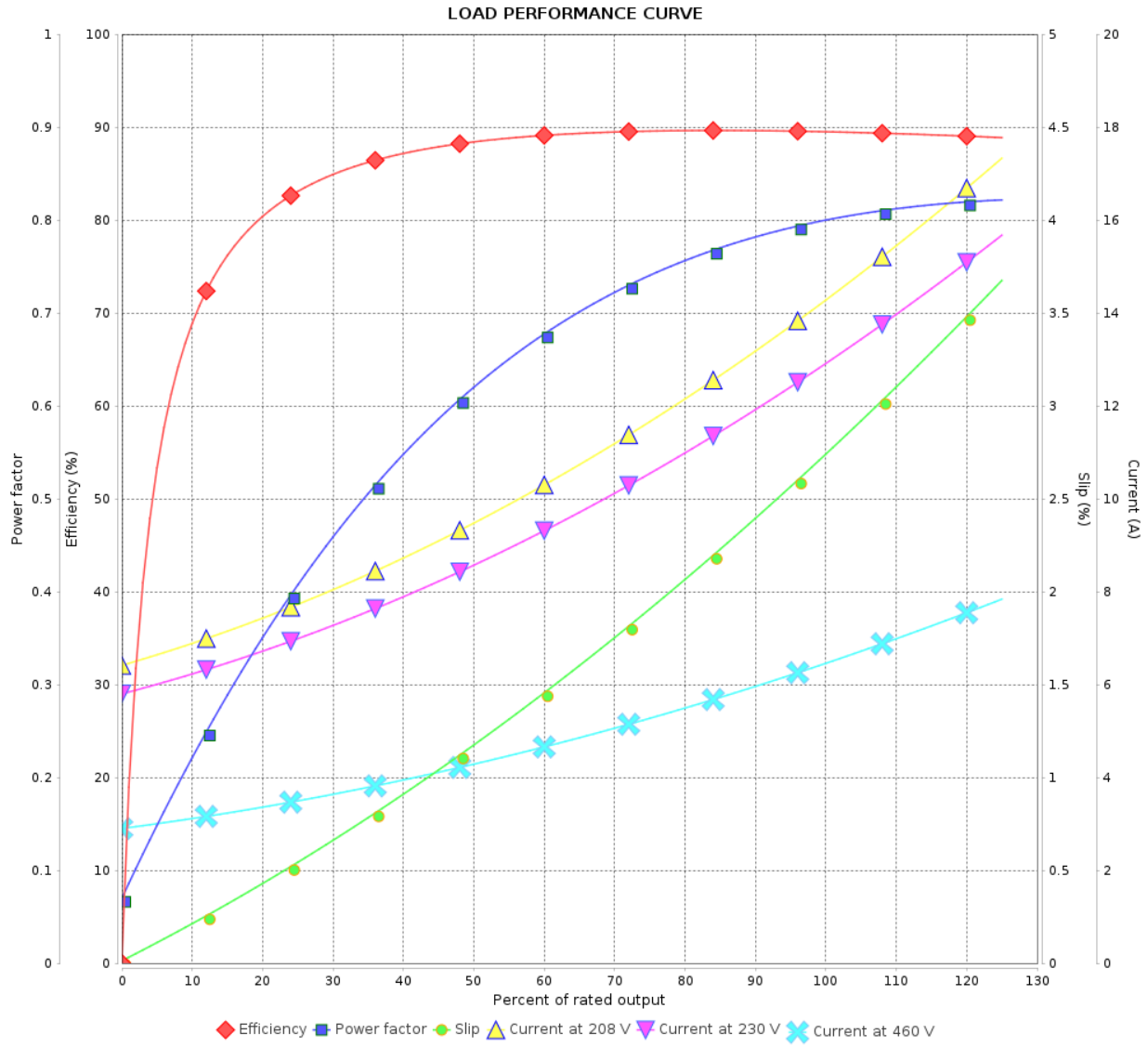

Performance	: 230/460 V 60 Hz 4P		
Rated current	: 13.0/6.49 A	Moment of inertia (J)	: 0.0169 kgm²
LRC	: 7.5	Duty cycle	: Cont.(S1)
Rated torque	: 2.07 kgfm	Insulation class	: F
Locked rotor torque	: 229 %	Service factor	: 1.25
Breakdown torque	: 290 %	Temperature rise	: 80 K
Rated speed	: 1750 rpm	Design	: B

Rev.	Changes Summary	Performed	Checked	Date

Performed by				
Checked by			Page	Revision
Date	20/10/2024		3 / 9	

This document is exclusive property of WEG S/A. Reprinting is not allowed without written authorization of WEG S/A.
Subject to change without notice

LOAD PERFORMANCE CURVE

Three Phase Induction Motor - Squirrel Cage

Customer :

Product line : W22 NEMA Premium Efficiency Three-Phase

Product code : 11416668

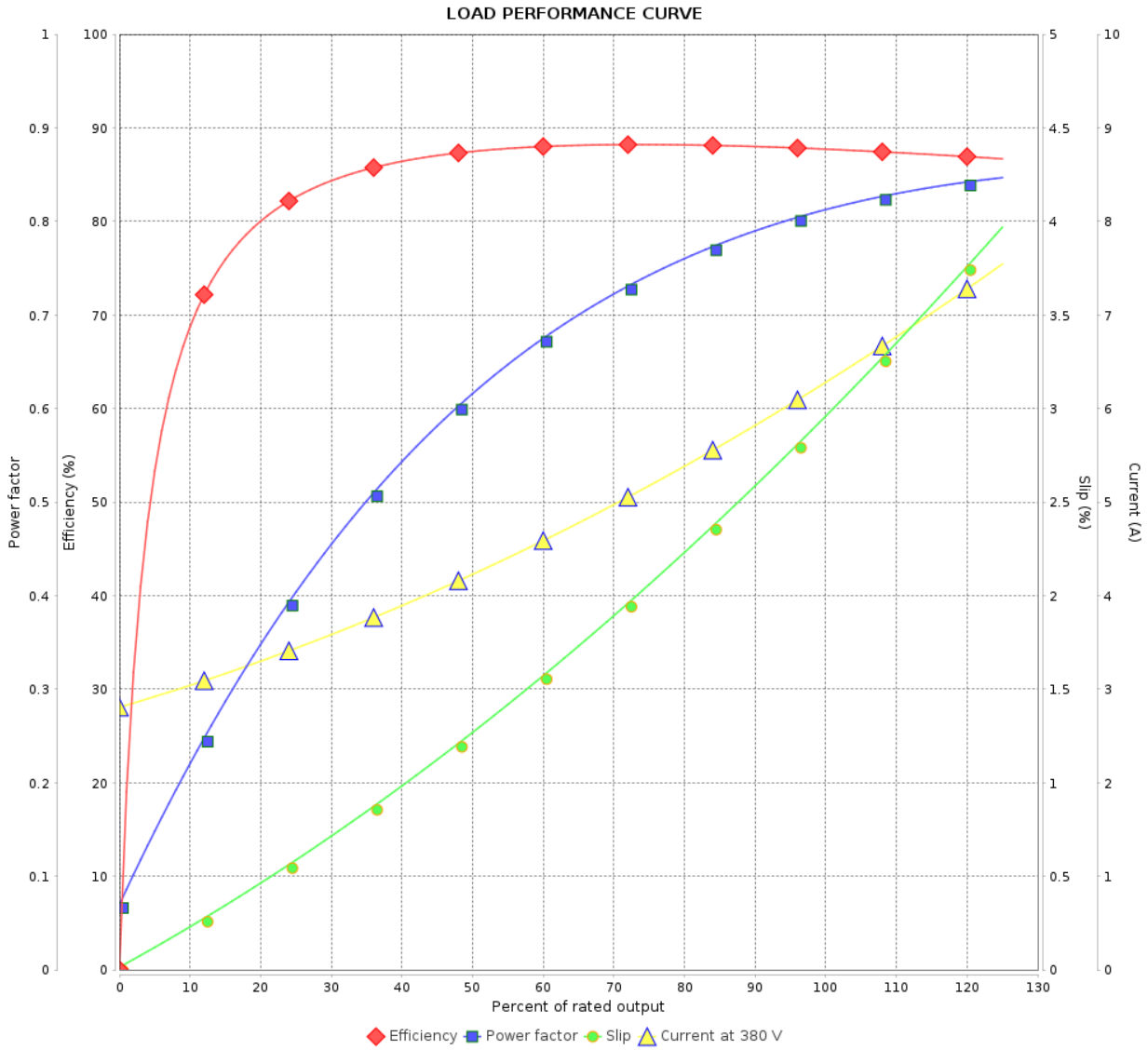

Performance	: 380 V 50 Hz 4P IE3		
Rated current	: 6.42 A	Moment of inertia (J)	: 0.0169 kgm²
LRC	: 7.0	Duty cycle	: Cont.(S1)
Rated torque	: 2.00 kgfm	Insulation class	: F
Locked rotor torque	: 229 %	Service factor	: 1.15
Breakdown torque	: 300 %	Temperature rise	: 80 K
Rated speed	: 1455 rpm	Design	: B

Rev.	Changes Summary	Performed	Checked	Date

Performed by				
Checked by			Page	Revision
Date	20/10/2024		4 / 9	

This document is exclusive property of WEG S/A. Reprinting is not allowed without written authorization of WEG S/A.
Subject to change without notice

LOAD PERFORMANCE CURVE

Three Phase Induction Motor - Squirrel Cage

Customer :

Product line : W22 NEMA Premium Efficiency Three-Phase

Product code : 11416668

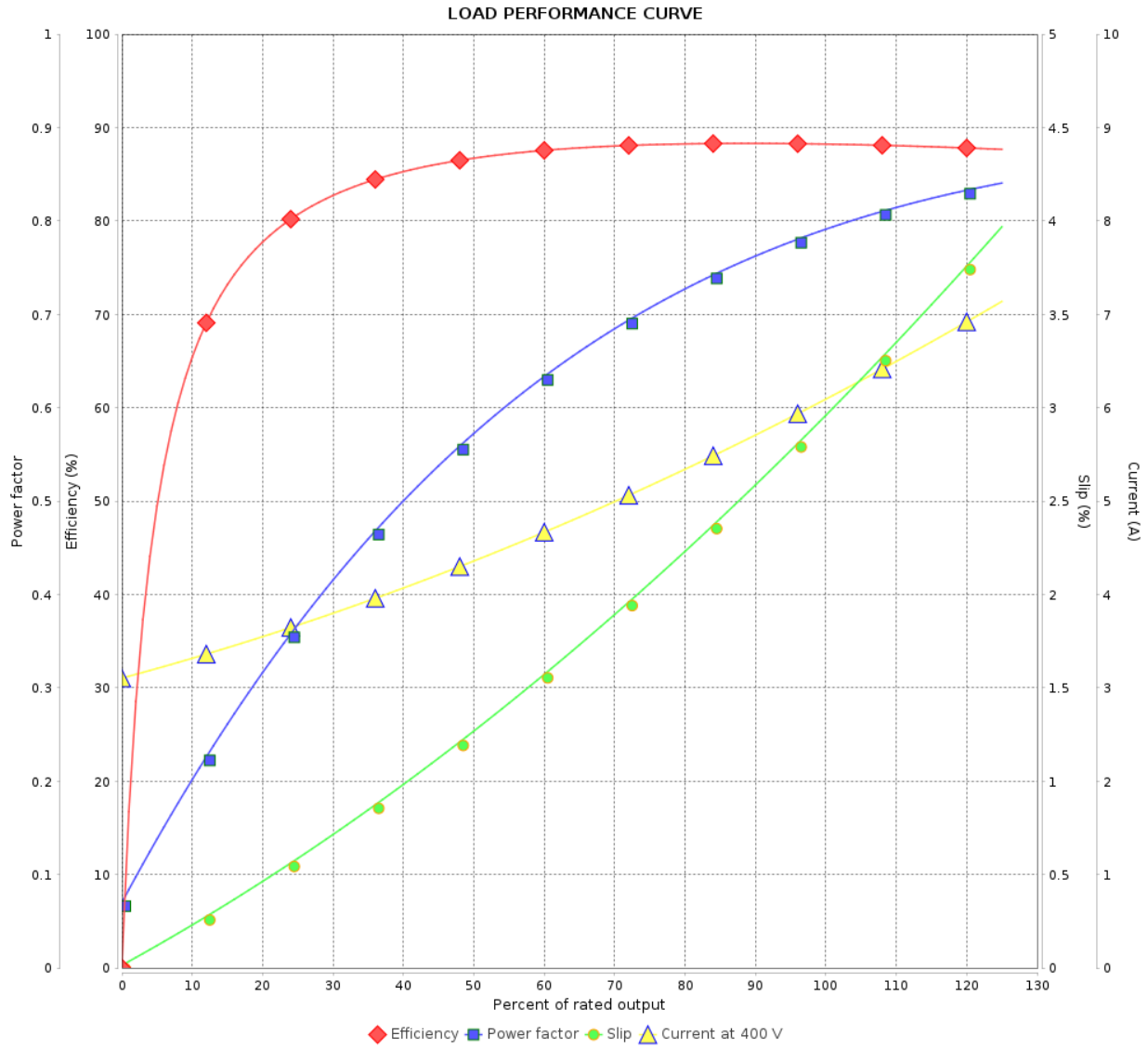

Performance	: 400 V 50 Hz 4P IE3		
Rated current	: 6.21 A	Moment of inertia (J)	: 0.0169 kgm²
LRC	: 7.7	Duty cycle	: Cont.(S1)
Rated torque	: 2.00 kgfm	Insulation class	: F
Locked rotor torque	: 260 %	Service factor	: 1.15
Breakdown torque	: 320 %	Temperature rise	: 80 K
Rated speed	: 1455 rpm	Design	: B

Rev.	Changes Summary	Performed	Checked	Date

Performed by				
Checked by			Page	Revision
Date	20/10/2024		5 / 9	

This document is exclusive property of WEG S/A. Reprinting is not allowed without written authorization of WEG S/A.
Subject to change without notice

LOAD PERFORMANCE CURVE

Three Phase Induction Motor - Squirrel Cage

Customer :

Product line : W22 NEMA Premium Efficiency Three-Phase

Product code : 11416668

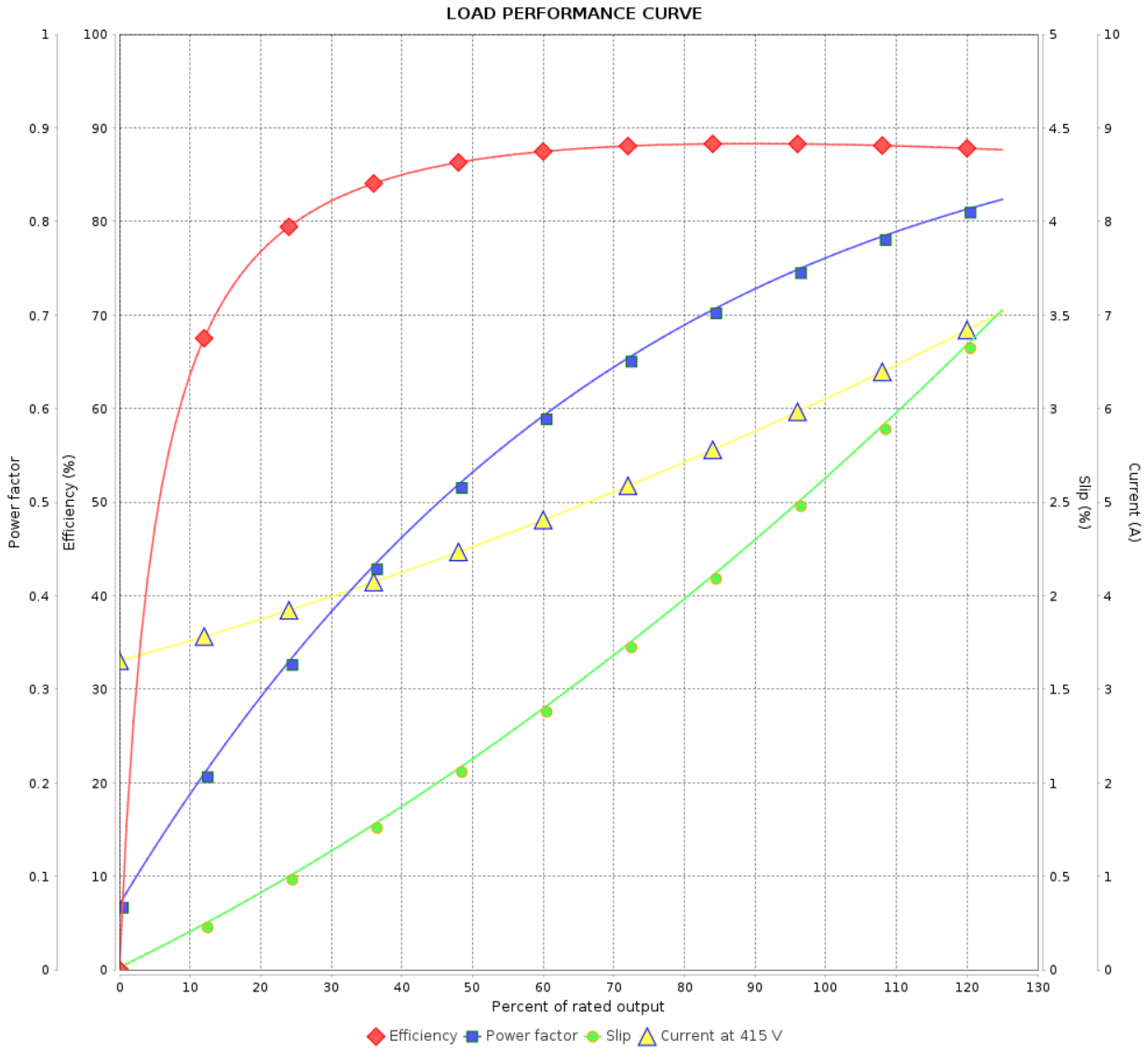

Performance	: 415 V 50 Hz 4P IE3		
Rated current	: 6.23 A	Moment of inertia (J)	: 0.0169 kgm²
LRC	: 8.2	Duty cycle	: Cont.(S1)
Rated torque	: 1.99 kgfm	Insulation class	: F
Locked rotor torque	: 290 %	Service factor	: 1.15
Breakdown torque	: 350 %	Temperature rise	: 80 K
Rated speed	: 1460 rpm	Design	: B

Rev.	Changes Summary	Performed	Checked	Date

Performed by				
Checked by			Page	Revision
Date	20/10/2024		6 / 9	

This document is exclusive property of WEG S/A. Reprinting is not allowed without written authorization of WEG S/A.
Subject to change without notice

LOAD PERFORMANCE CURVE

Three Phase Induction Motor - Squirrel Cage

Customer :

Product line : W22 NEMA Premium Efficiency Three-Phase

Product code : 11416668

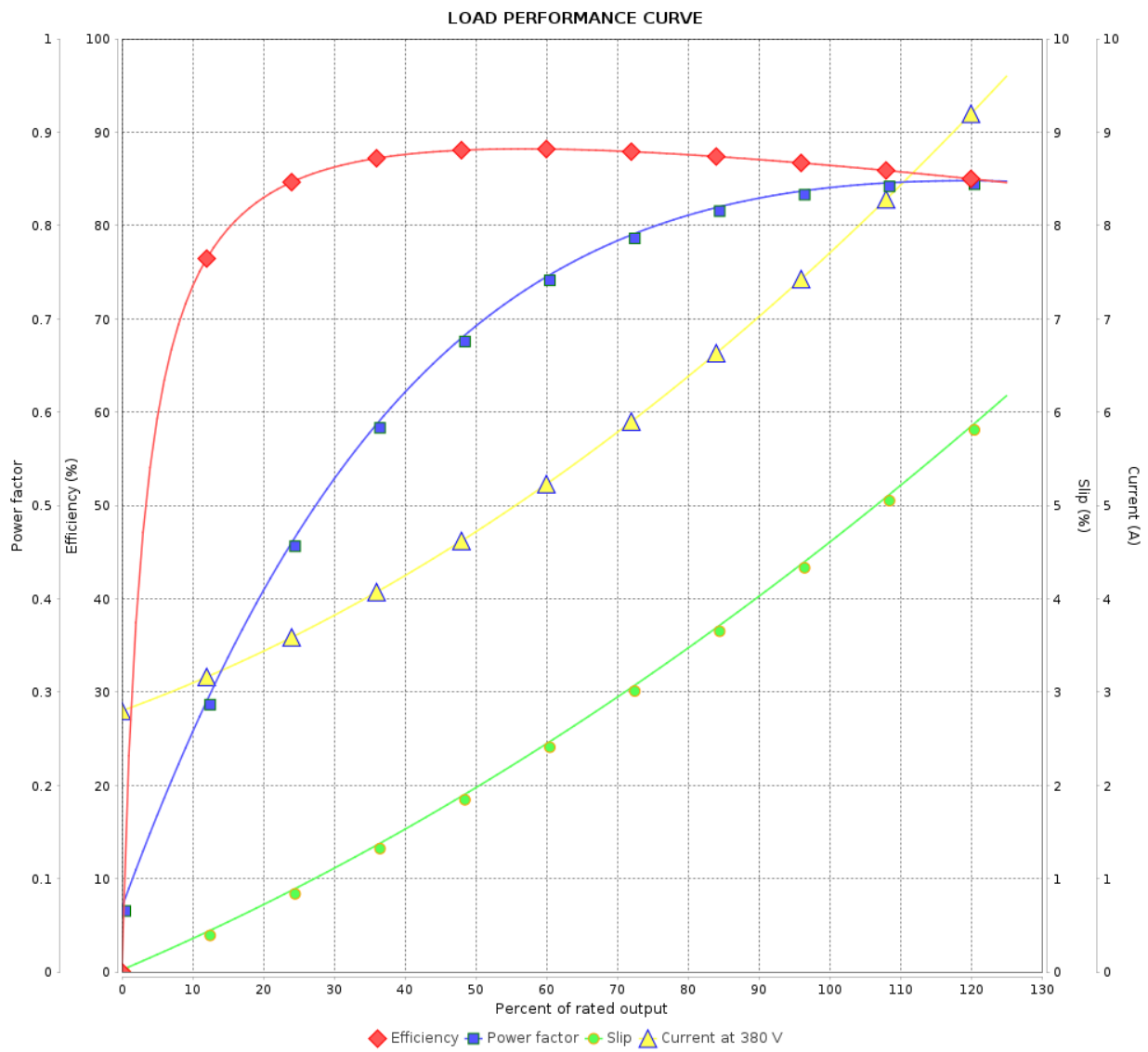

Performance	: 380 V 50 Hz 4P IE2

Rated current	: 7.74 A	Moment of inertia (J)	: 0.0169 kgm²
LRC	: 5.8	Duty cycle	: Cont.(S1)
Rated torque	: 2.54 kgfm	Insulation class	: F
Locked rotor torque	: 185 %	Service factor	: 1.15
Breakdown torque	: 225 %	Temperature rise	: 80 K
Rated speed	: 1430 rpm	Design	: B

Rev.	Changes Summary	Performed	Checked	Date

Performed by				
Checked by			Page	Revision
Date	20/10/2024		7 / 9	

This document is exclusive property of WEG S/A. Reprinting is not allowed without written authorization of WEG S/A.
Subject to change without notice

LOAD PERFORMANCE CURVE

Three Phase Induction Motor - Squirrel Cage

Customer	:

Product line	: W22 NEMA Premium Efficiency Three-Phase	Product code :	11416668

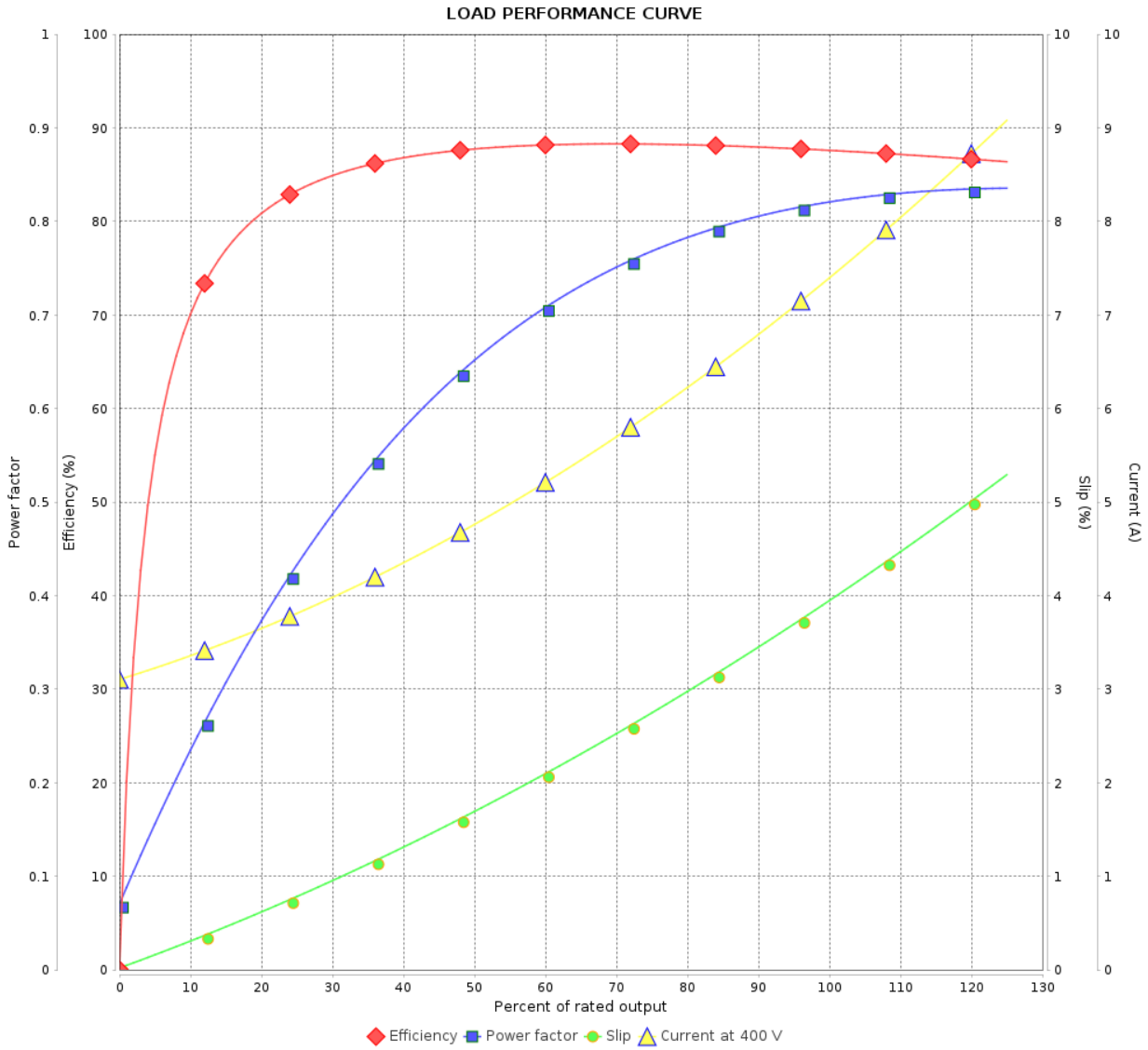

Performance	: 400 V 50 Hz 4P IE2

Rated current	: 7.44 A	Moment of inertia (J)	: 0.0169 kgm²
LRC	: 6.4	Duty cycle	: Cont.(S1)
Rated torque	: 2.52 kgfm	Insulation class	: F
Locked rotor torque	: 210 %	Service factor	: 1.15
Breakdown torque	: 250 %	Temperature rise	: 80 K
Rated speed	: 1440 rpm	Design	: B

Rev.	Changes Summary	Performed	Checked	Date

Performed by				
Checked by			Page	Revision
Date	20/10/2024		8 / 9	

This document is exclusive property of WEG S/A. Reprinting is not allowed without written authorization of WEG S/A.
Subject to change without notice

LOAD PERFORMANCE CURVE

Three Phase Induction Motor - Squirrel Cage

Customer :

Product line : W22 NEMA Premium Efficiency Three-Phase

Product code : 11416668

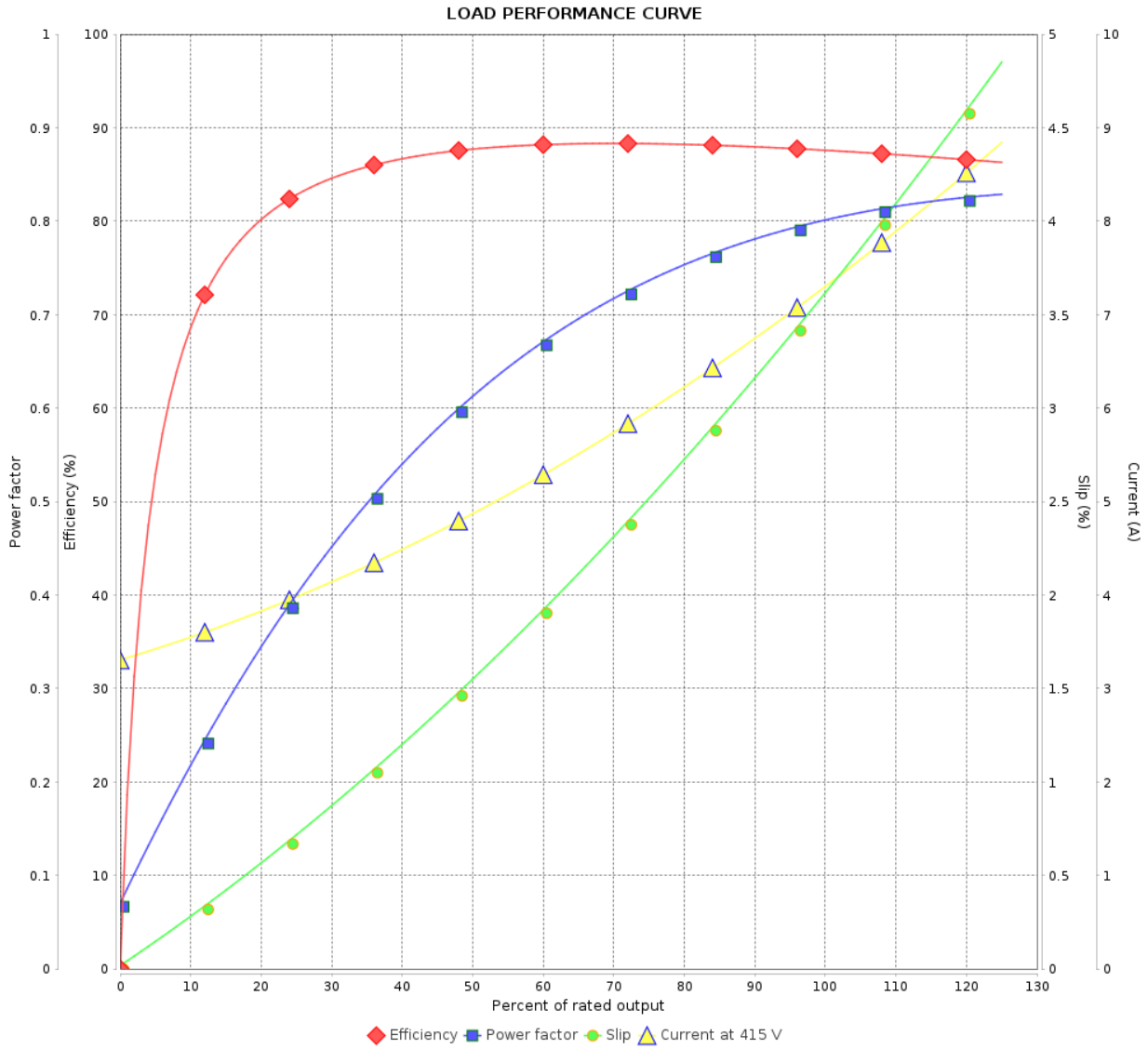

Performance	: 415 V 50 Hz 4P IE2

Rated current	: 7.35 A	Moment of inertia (J)	: 0.0169 kgm²
LRC	: 6.9	Duty cycle	: Cont.(S1)
Rated torque	: 2.51 kgfm	Insulation class	: F
Locked rotor torque	: 229 %	Service factor	: 1.15
Breakdown torque	: 270 %	Temperature rise	: 80 K
Rated speed	: 1445 rpm	Design	: B

Rev.	Changes Summary	Performed	Checked	Date

Performed by				
Checked by			Page	Revision
Date	20/10/2024		9 / 9	

This document is exclusive property of WEG S/A. Reprinting is not allowed without written authorization of WEG S/A.
Subject to change without notice

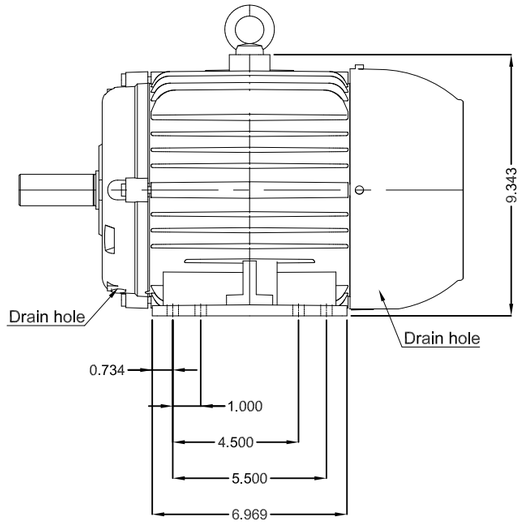

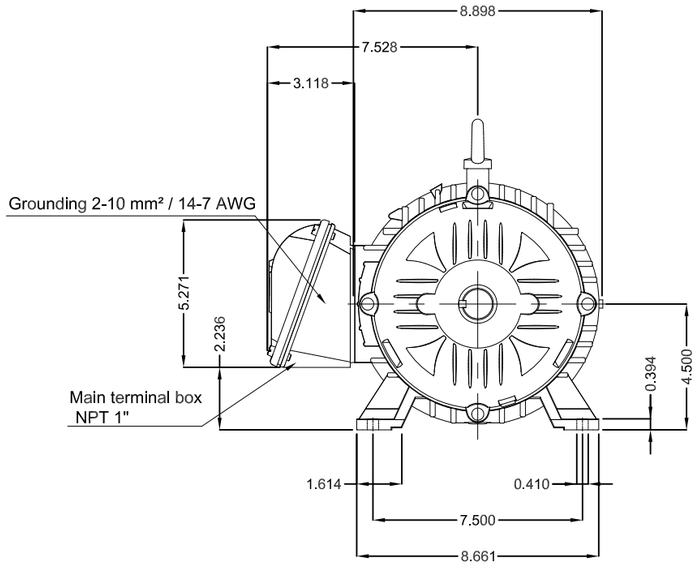

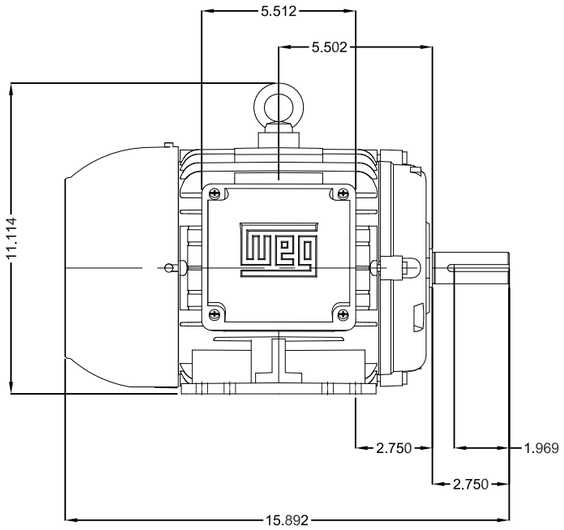

Color RAL 5009

Painting plan 207A

Mounting B3R(D)

DE Shaft End

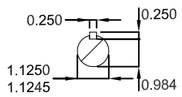

5 HP 04 Poles 60 Hz | A

ECM	LOC	SUMMARY OF MODIFICATIONS	EXECUTED	CHECKED	RELEASED	DATE	VER
			HYBRISUSER				00

EXECUTED	HYBRISUSER
CHECKED	
RELEASED	
REL. DATE	

THREE PH. MOTOR W22 NEMA PREM. EFF.
FRAME 182/4T IP55 TEFC

PREVIEW

WDD 00

SHEET /

Dimensions in inches

A3

WEG's property. Forbidden reproduction without previous authorization.