DATA SHEET

Three Phase Induction Motor - Squirrel Cage

Customer :

Product line : W22 NEMA Premium Efficiency Three-Phase

Product code : 12378662

Frame	: 182/4T	Cooling method	: IC411 - TEFC
Insulation class	: F	Mounting	: F-1
Duty cycle	: Cont.(S1)	Rotation¹	: Both (CW and CCW)
Ambient temperature	: -20°C to +40°C	Starting method	: Direct On Line
Altitude	: 1000 m.a.s.l.	Approx. weight³	: 34.7 kg
Protection degree	: IP55	Moment of inertia (J)	: 0.0080 kgm²
Design	: B		

Output [HP]	3	2	2	2	3	3	3
Poles	2	2	2	2	2	2	2
Frequency [Hz]	60	50	50	50	50	50	50
Rated voltage [V]	230/460	380	400	415	380	400	415
Rated current [A]	7.52/3.76	3.28	3.24	3.24	4.44	4.32	4.26
L. R. Amperes [A]	64.7/32.3	31.8	35.0	36.0	31.1	32.8	35.4
LRC [A]	8.6x(Code K)	9.7x(Code M)	10.8x(Code N)	11.1x(Code P)	7.0x(Code H)	7.6x(Code J)	8.3x(Code K)
No load current [A]	3.20/1.60	1.50	1.65	1.80	1.50	1.70	1.80
Rated speed [RPM]	3515	2935	2940	2945	2890	2900	2910
Slip [%]	2.36	2.17	2.00	1.83	3.67	3.33	3.00
Rated torque [kgfm]	0.619	0.495	0.494	0.493	0.753	0.751	0.748
Locked rotor torque [%]	250	280	320	350	190	210	229
Breakdown torque [%]	380	420	470	509	270	300	330
Service factor	1.25	1.25	1.25	1.25	1.25	1.25	1.25
Temperature rise	80 K	80 K	80 K	80 K	80 K	80 K	80 K
Locked rotor time	46s (cold) 26s (hot)	52s (cold) 29s (hot)	43s (cold) 24s (hot)	48s (cold) 27s (hot)	41s (cold) 23s (hot)	43s (cold) 24s (hot)	34s (cold) 19s (hot)
Noise level²	66.0 dB(A)	62.0 dB(A)	62.0 dB(A)	62.0 dB(A)	62.0 dB(A)	62.0 dB(A)	62.0 dB(A)
Efficiency (%) 25%							
Efficiency (%) 50%	82.0	81.0	80.6	79.7	84.0	84.0	84.0
Efficiency (%) 75%	86.0	84.5	84.5	84.1	85.5	85.5	85.5
Efficiency (%) 100%	86.5	85.8	85.8	85.9	85.5	85.5	85.5
Power Factor 25%							
Power Factor 50%	0.70	0.63	0.58	0.55	0.76	0.71	0.68
Power Factor 75%	0.80	0.75	0.71	0.67	0.84	0.81	0.79
Power Factor 100%	0.85	0.81	0.78	0.75	0.88	0.86	0.84

Losses at normative operating points (speed;torque), in percentage of rated output power

Losses (%) P1 (0,9;1,0)	14.6	14.6	14.6	14.6	14.6	14.6	14.6
Losses (%) P2 (0,5;1,0)	10.7	10.7	10.7	10.7	10.7	10.7	10.7
Losses (%) P3 (0,25;1,0)	9.4	9.4	9.4	9.4	9.4	9.4	9.4
Losses (%) P4 (0,9;0,5)	8.3	8.3	8.3	8.3	8.3	8.3	8.3
Losses (%) P5 (0,5;0,5)	4.5	4.5	4.5	4.5	4.5	4.5	4.5
Losses (%) P6 (0,5;0,25)	3.1	3.1	3.1	3.1	3.1	3.1	3.1
Losses (%) P7 (0,25;0,25)	1.8	1.8	1.8	1.8	1.8	1.8	1.8

		Drive end	Non drive end
Bearing type	:	6207 ZZ	6206 ZZ
Sealing	:	V'Ring	V'Ring
Lubrication interval	:	-	-
Lubricant amount	:	-	-
Lubricant type	:	Mobil Polyrex EM	

Foundation loads

Max. traction : 34 kgf

Max. compression : 69 kgf

This revision replaces and cancel the previous one, which must be eliminated.

(1) Looking the motor from the shaft end.

These are average values based on tests with sinusoidal power supply, subject to the tolerances stipulated in NEMA MG-1.

Rev.	Changes Summary	Performed	Checked	Date

Performed by				
Checked by			Page	Revision
Date	20/10/2024		1 / 9	

This document is exclusive property of WEG S/A. Reprinting is not allowed without written authorization of WEG S/A.
Subject to change without notice

DATA SHEET

Three Phase Induction Motor - Squirrel Cage

Customer :

Notes
USABLE @208V 8.01A SF 1.15 SFA 9.21A

Rev.	Changes Summary	Performed	Checked	Date

Performed by				
Checked by			Page	Revision
Date	20/10/2024		2 / 9	

This document is exclusive property of WEG S/A. Reprinting is not allowed without written authorization of WEG S/A.
Subject to change without notice

LOAD PERFORMANCE CURVE

Three Phase Induction Motor - Squirrel Cage

Customer :

Product line : W22 NEMA Premium Efficiency Three-Phase

Product code : 12378662

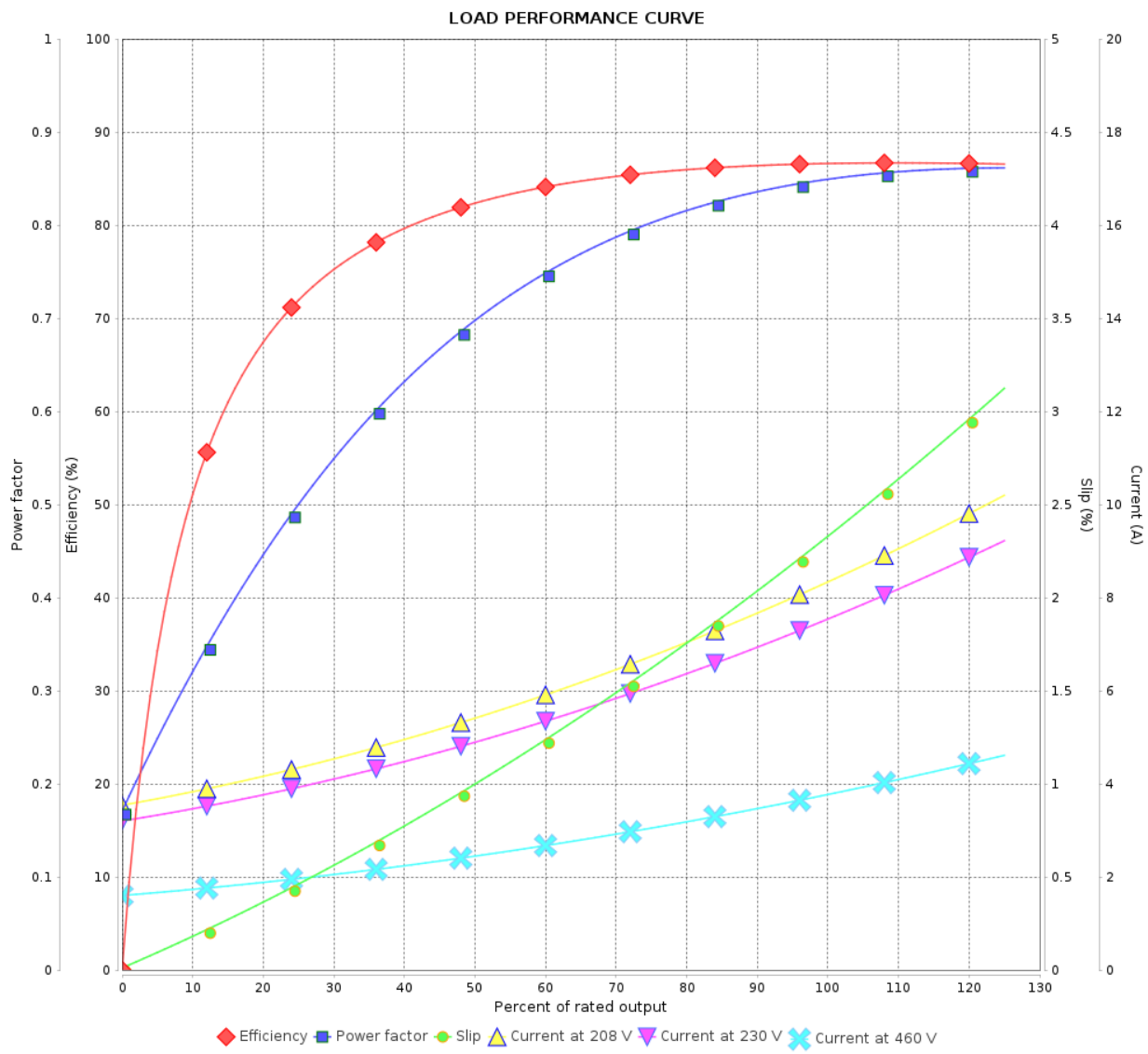

Performance	: 230/460 V 60 Hz 2P		
Rated current	: 7.52/3.76 A	Moment of inertia (J)	: 0.0080 kgm²
LRC	: 8.6	Duty cycle	: Cont.(S1)
Rated torque	: 0.619 kgfm	Insulation class	: F
Locked rotor torque	: 250 %	Service factor	: 1.25
Breakdown torque	: 380 %	Temperature rise	: 80 K
Rated speed	: 3515 rpm	Design	: B

Rev.	Changes Summary	Performed	Checked	Date

Performed by				
Checked by			Page	Revision
Date	20/10/2024		3 / 9	

This document is exclusive property of WEG S/A. Reprinting is not allowed without written authorization of WEG S/A.
Subject to change without notice

LOAD PERFORMANCE CURVE

Three Phase Induction Motor - Squirrel Cage

Customer :

Product line : W22 NEMA Premium Efficiency Three-Phase

Product code : 12378662

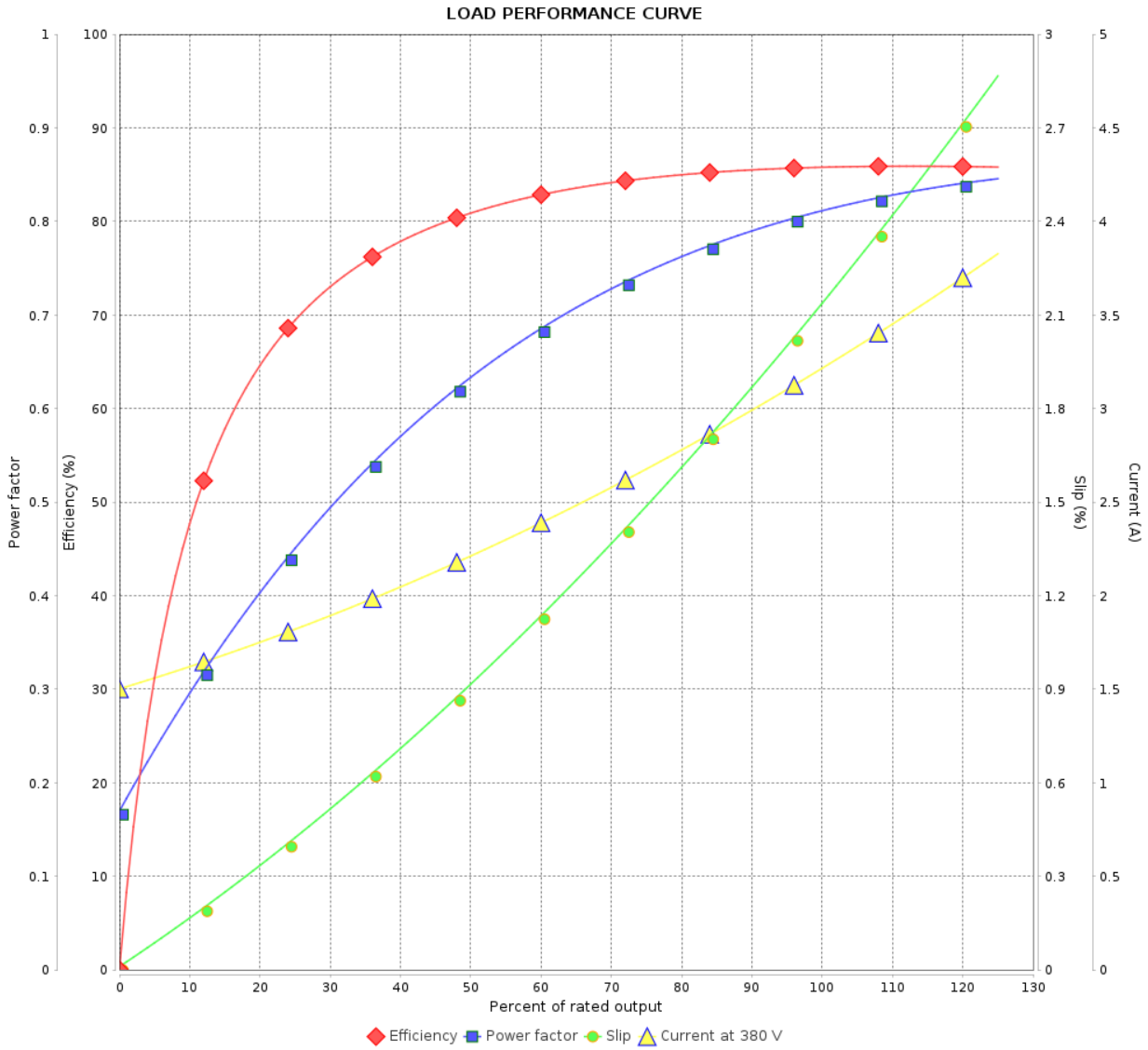

Performance	: 380 V 50 Hz 2P IE3		
Rated current	: 3.28 A	Moment of inertia (J)	: 0.0080 kgm²
LRC	: 9.7	Duty cycle	: Cont.(S1)
Rated torque	: 0.495 kgfm	Insulation class	: F
Locked rotor torque	: 280 %	Service factor	: 1.25
Breakdown torque	: 420 %	Temperature rise	: 80 K
Rated speed	: 2935 rpm	Design	: B

Rev.	Changes Summary	Performed	Checked	Date

Performed by				
Checked by			Page	Revision
Date	20/10/2024		4 / 9	

This document is exclusive property of WEG S/A. Reprinting is not allowed without written authorization of WEG S/A.
Subject to change without notice

LOAD PERFORMANCE CURVE

Three Phase Induction Motor - Squirrel Cage

Customer :

Product line : W22 NEMA Premium Efficiency Three-Phase

Product code : 12378662

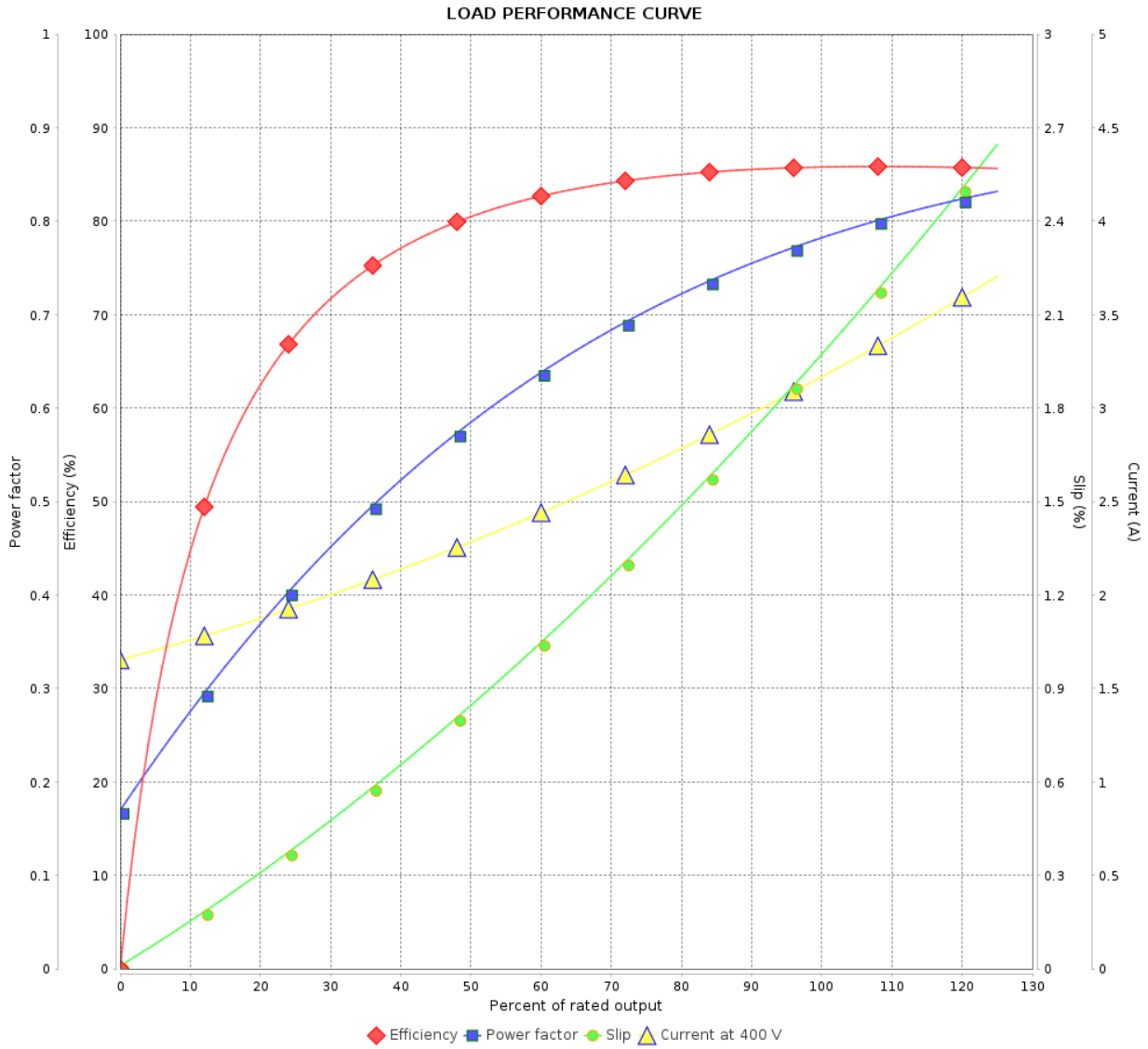

Performance	: 400 V 50 Hz 2P IE3		
Rated current	: 3.24 A	Moment of inertia (J)	: 0.0080 kgm²
LRC	: 10.8	Duty cycle	: Cont.(S1)
Rated torque	: 0.494 kgfm	Insulation class	: F
Locked rotor torque	: 320 %	Service factor	: 1.25
Breakdown torque	: 470 %	Temperature rise	: 80 K
Rated speed	: 2940 rpm	Design	: B

Rev.	Changes Summary	Performed	Checked	Date

Performed by				
Checked by			Page	Revision
Date	20/10/2024		5 / 9	

This document is exclusive property of WEG S/A. Reprinting is not allowed without written authorization of WEG S/A.
Subject to change without notice

LOAD PERFORMANCE CURVE

Three Phase Induction Motor - Squirrel Cage

Customer :

Product line : W22 NEMA Premium Efficiency Three-Phase

Product code : 12378662

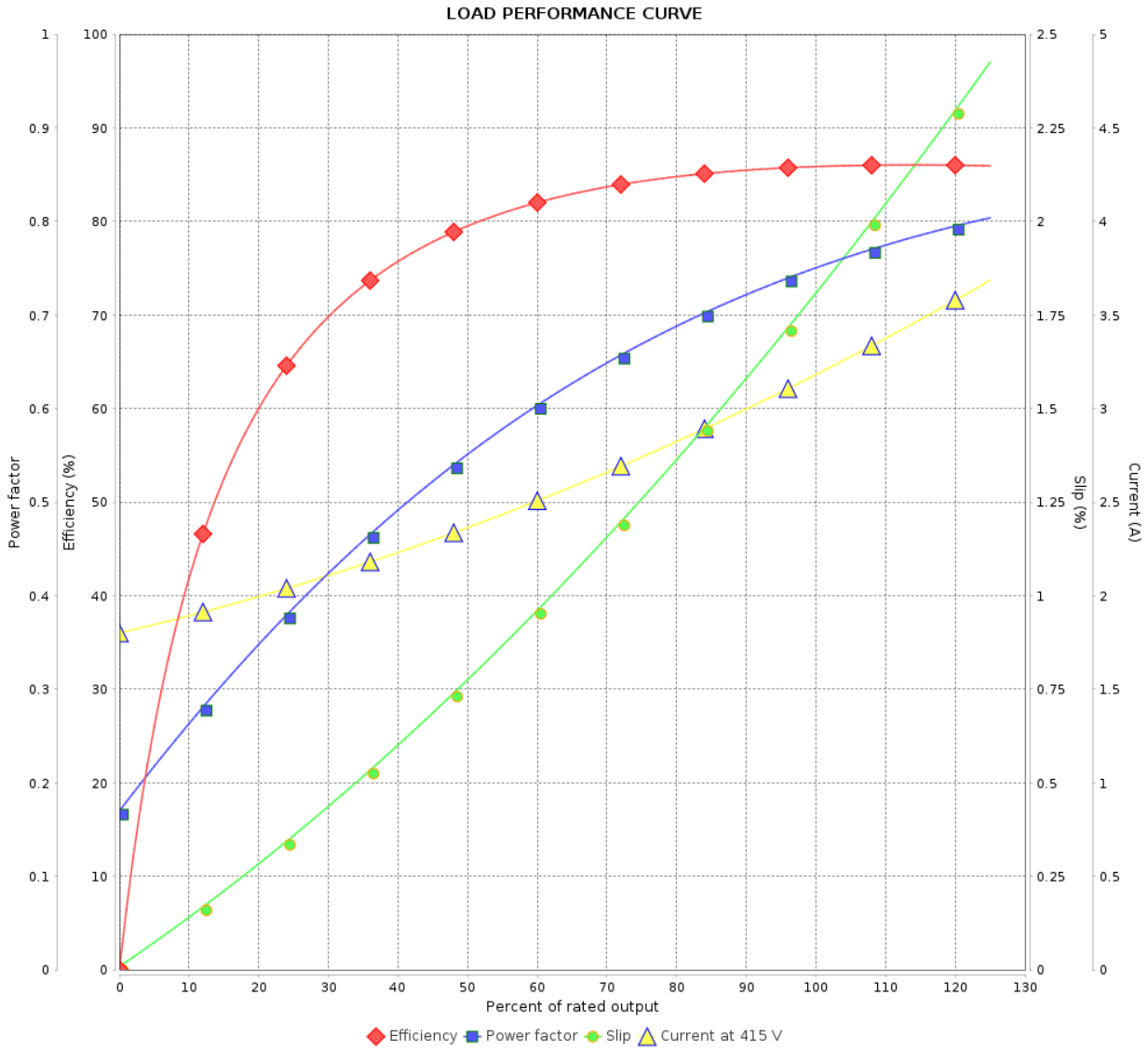

Performance	: 415 V 50 Hz 2P IE3		
Rated current	: 3.24 A	Moment of inertia (J)	: 0.0080 kgm²
LRC	: 11.1	Duty cycle	: Cont.(S1)
Rated torque	: 0.493 kgfm	Insulation class	: F
Locked rotor torque	: 350 %	Service factor	: 1.25
Breakdown torque	: 509 %	Temperature rise	: 80 K
Rated speed	: 2945 rpm	Design	: B

Rev.	Changes Summary	Performed	Checked	Date

Performed by				
Checked by			Page	Revision
Date	20/10/2024		6 / 9	

This document is exclusive property of WEG S/A. Reprinting is not allowed without written authorization of WEG S/A.
Subject to change without notice

LOAD PERFORMANCE CURVE

Three Phase Induction Motor - Squirrel Cage

Customer :

Product line : W22 NEMA Premium Efficiency Three-Phase

Product code : 12378662

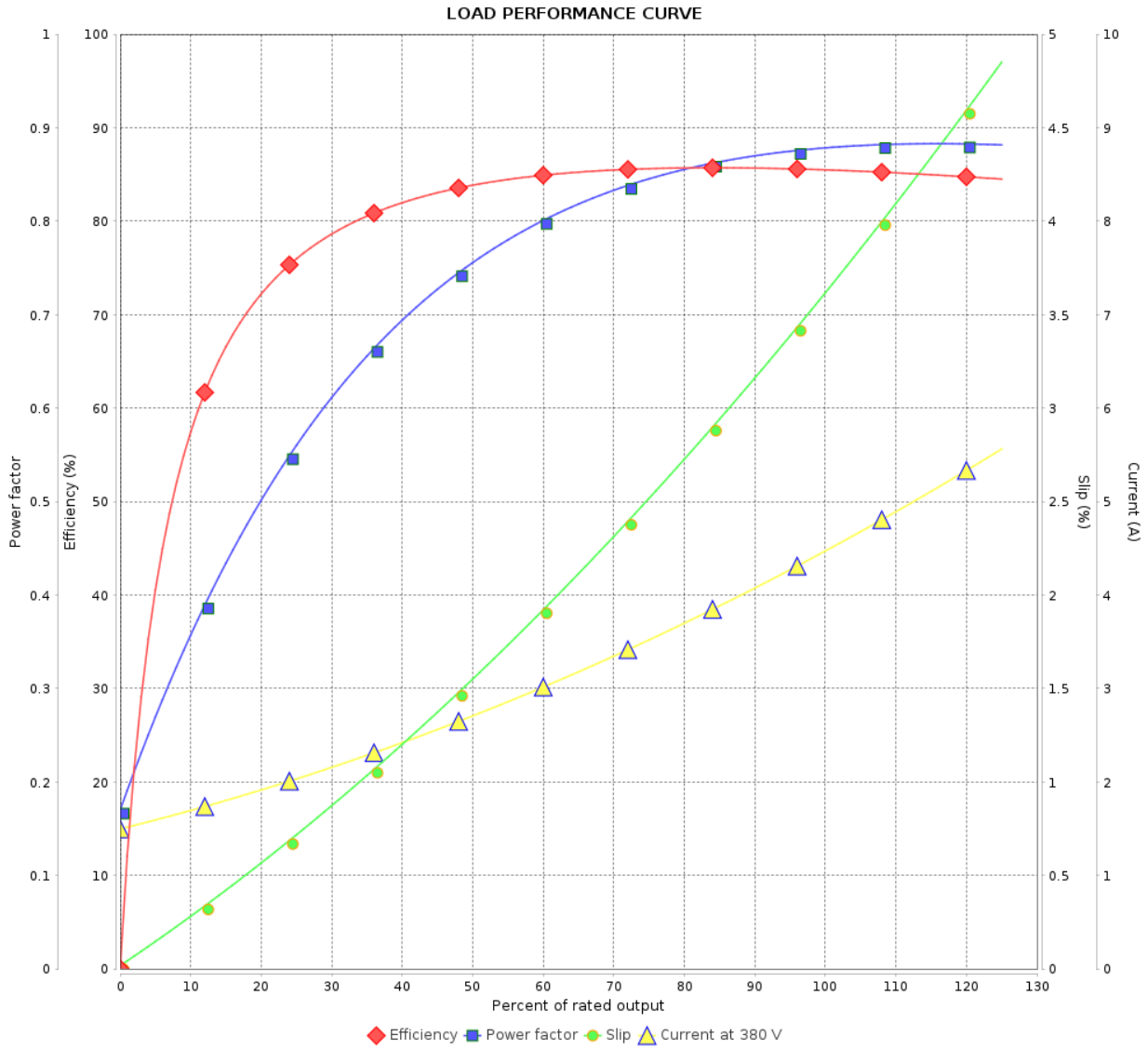

Performance	: 380 V 50 Hz 2P IE2

Rated current	: 4.44 A	Moment of inertia (J)	: 0.0080 kgm²
LRC	: 7.0	Duty cycle	: Cont.(S1)
Rated torque	: 0.753 kgfm	Insulation class	: F
Locked rotor torque	: 190 %	Service factor	: 1.25
Breakdown torque	: 270 %	Temperature rise	: 80 K
Rated speed	: 2890 rpm	Design	: B

Rev.	Changes Summary	Performed	Checked	Date

Performed by				
Checked by			Page	Revision
Date	20/10/2024		7 / 9	

This document is exclusive property of WEG S/A. Reprinting is not allowed without written authorization of WEG S/A.
Subject to change without notice

LOAD PERFORMANCE CURVE

Three Phase Induction Motor - Squirrel Cage

Customer :

Product line : W22 NEMA Premium Efficiency Three-Phase

Product code : 12378662

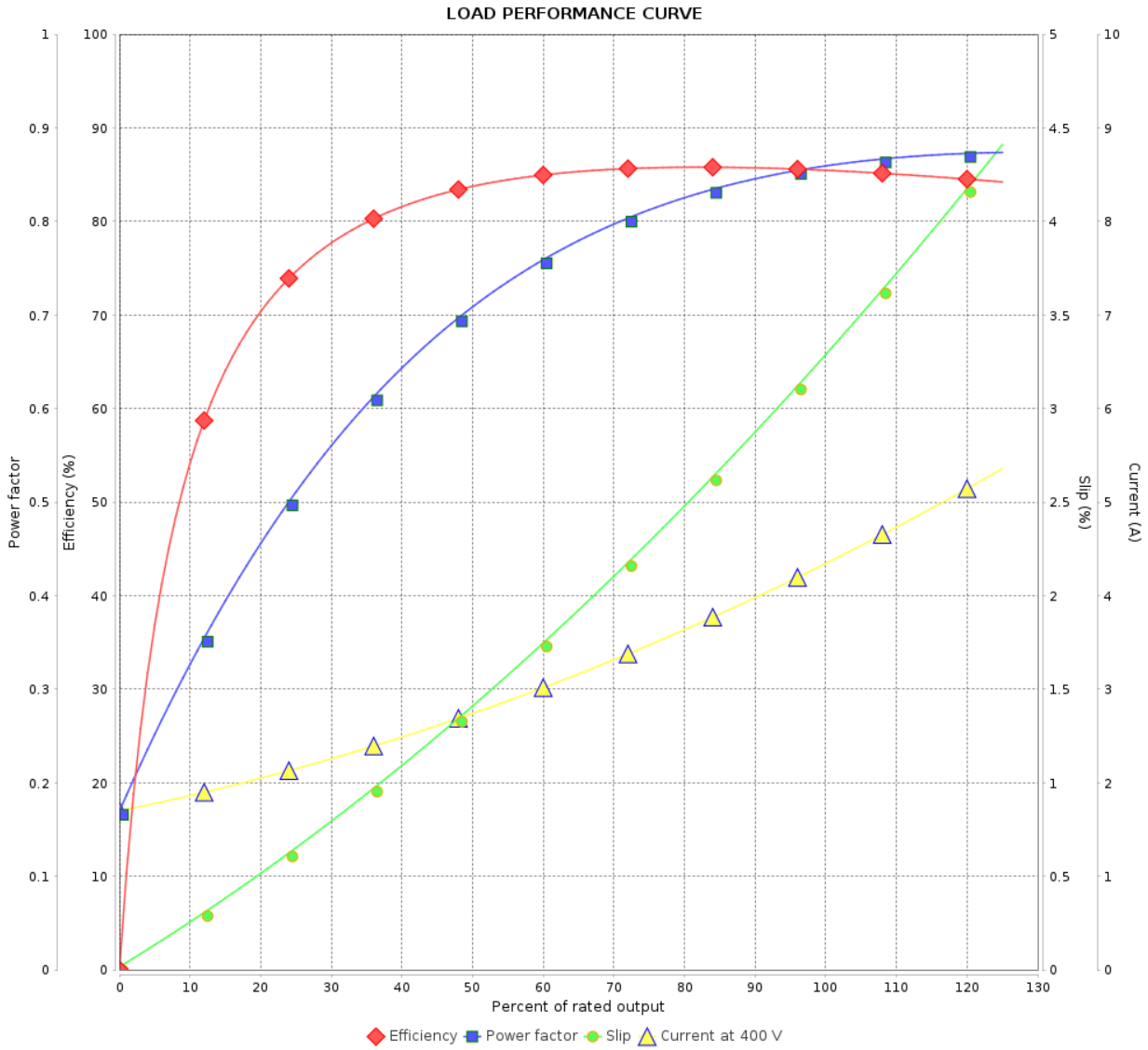

Performance	: 400 V 50 Hz 2P IE2		
Rated current	: 4.32 A	Moment of inertia (J)	: 0.0080 kgm²
LRC	: 7.6	Duty cycle	: Cont.(S1)
Rated torque	: 0.751 kgfm	Insulation class	: F
Locked rotor torque	: 210 %	Service factor	: 1.25
Breakdown torque	: 300 %	Temperature rise	: 80 K
Rated speed	: 2900 rpm	Design	: B

Rev.	Changes Summary	Performed	Checked	Date

Performed by				
Checked by			Page	Revision
Date	20/10/2024		8 / 9	

This document is exclusive property of WEG S/A. Reprinting is not allowed without written authorization of WEG S/A.
Subject to change without notice

LOAD PERFORMANCE CURVE

Three Phase Induction Motor - Squirrel Cage

Customer :

Product line : W22 NEMA Premium Efficiency Three-Phase

Product code : 12378662

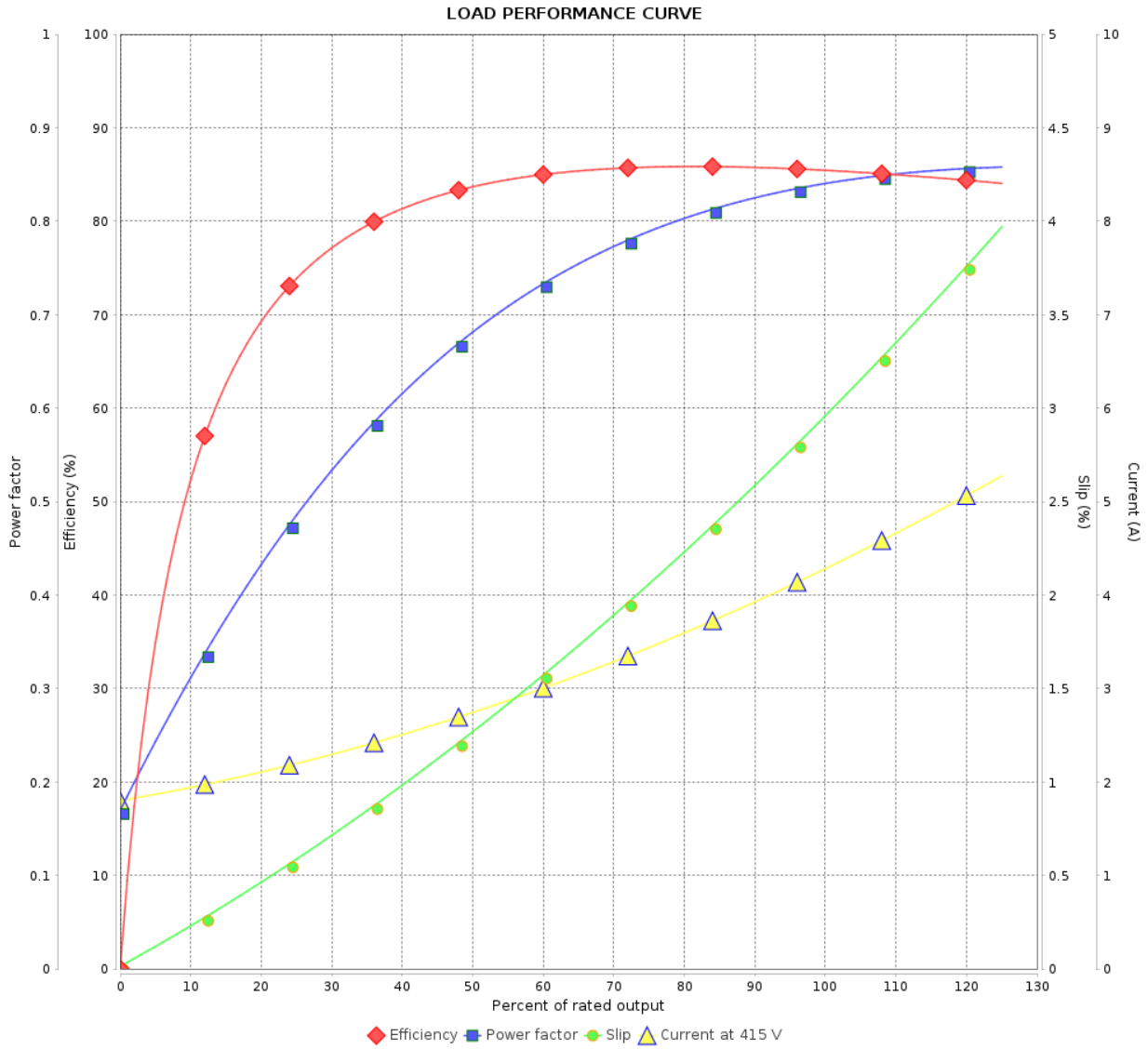

Performance	: 415 V 50 Hz 2P IE2		
Rated current	: 4.26 A	Moment of inertia (J)	: 0.0080 kgm²
LRC	: 8.3	Duty cycle	: Cont.(S1)
Rated torque	: 0.748 kgfm	Insulation class	: F
Locked rotor torque	: 229 %	Service factor	: 1.25
Breakdown torque	: 330 %	Temperature rise	: 80 K
Rated speed	: 2910 rpm	Design	: B

Rev.	Changes Summary	Performed	Checked	Date

Performed by				
Checked by			Page	Revision
Date	20/10/2024		9 / 9	

This document is exclusive property of WEG S/A. Reprinting is not allowed without written authorization of WEG S/A.
Subject to change without notice

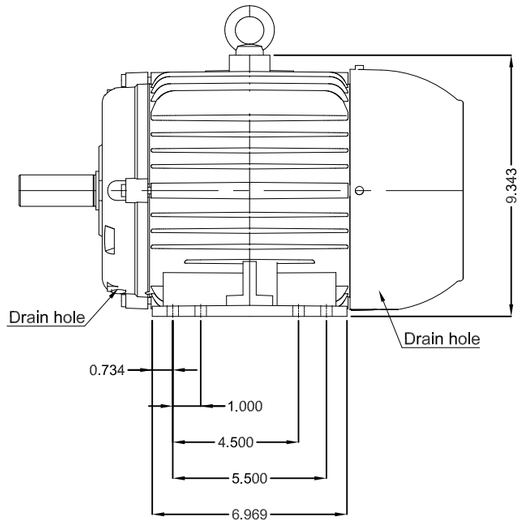

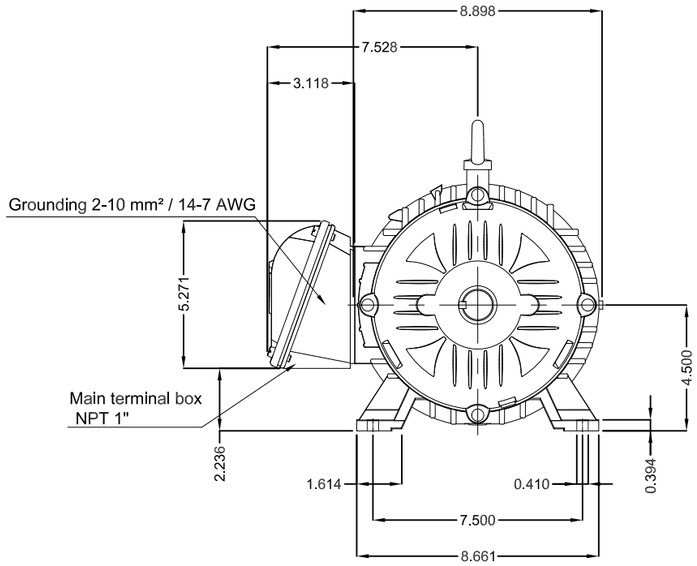

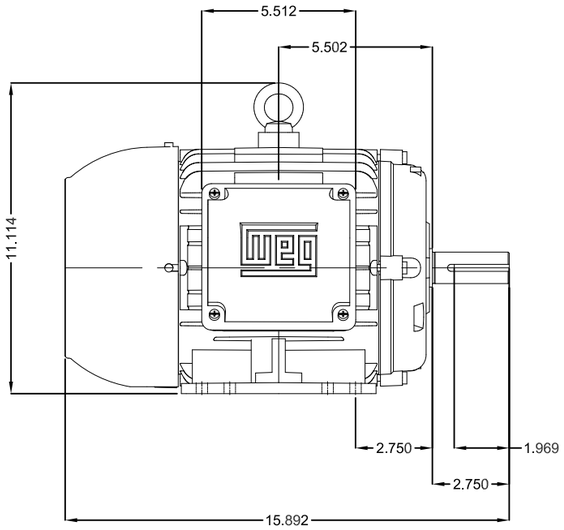

DE Shaft End

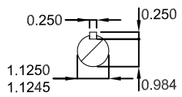

Color RAL 5009

Painting plan 207A

Mounting B3R(D)

3 HP 02 Poles 60 Hz | A

ECM	LOC	SUMMARY OF MODIFICATIONS	EXECUTED	CHECKED	RELEASED	DATE	VER
			HYBRISUSER				00

EXECUTED	HYBRISUSER
CHECKED	
RELEASED	
REL. DATE	

THREE PH. MOTOR W22 NEMA PREM. EFF.
FRAME 182/4T IP55 TEFC

PREVIEW

WDD 00

SHEET /

Dimensions in inches

A3

WEG's property. Forbidden reproduction without previous authorization.