NEMA | **Model SSG0034FS-TC**
MFG PN: TSSF140TC3U4B

Model **SSG0034FS-TC**

Product Data Package

MODEL	HP	RPM	VOLTAGE	PHASE	Hz	FRAME	MOUNT	ENCLOSURE
SSG0034FS-TC	3	1750	575	3	60	140TC	Rigid/C-Flange	TEFC

Toronto

TOLL FREE 1.888.286.1820
PHONE 905.829.1001
EMAIL info@techtopcanada.com

Montreal

TOLL FREE 1.844.354.5111
PHONE 514.354.1002
EMAIL infoQC@techtopcanada.com

Moncton

PHONE 506.386.5794
EMAIL infoNB@techtopcanada.com

Winnipeg

PHONE 204.633.2779
EMAIL infoWEST@techtopcanada.com

Calgary

PHONE 403.313.6363
EMAIL infoWEST@techtopcanada.com

Vancouver

PHONE 604.525.1551
EMAIL infoWEST@techtopcanada.com

Index

Motor General Data Sheet P 2
Nameplate Information P 3
Technical Performance Data P 4
Motor General Wiring Diagram P 5
Motor General Outline Drawing P 6

NEMA

Model SSG0034FS-TC
MFG PN: TSSF140TC3U4B

ELECTRICAL DATA		
Rated Motor Output Power	3	HP
	2.2	kW
Rated Motor Speed	1750	r/min 60Hz
	-	r/min 50Hz
Rated Motor Voltage (+/-10%)	575	V/60Hz
	-	V/50Hz
Rated Motor Current	3.35	A (I_n) @ 60Hz
	-	A (I_n) @ 50Hz
Phase	3	Ø
Locked Rotor Current @ High Voltage	-	A (I_n) @ 60Hz
FI Current @ 208V	-	A (I_n) @ 60Hz
Service Factor	1.25	@ 60Hz
	-	@ 50Hz
KVA Code	L	60Hz
	-	50Hz
Nominal Efficiency	89.5	% @ 60Hz
Nominal Power Factor	0.75	cosΦ @ 60Hz
Leads (Qty, Size)	3	18
Connection	Y	–
Coil Resistance	-	Ω
Start Capacitor	-	µF/V
Run Capacitor	-	µF/V
VFD DUTY (S.F. 1.0)	**RATIO**	**Hz**
Variable Torque	30:1	2 - 60
Constant Torque	15:1	4 - 60
FULL LOAD TEMPERATURE RISE		
Full Load Temperature Rise	67.7	°C @ 60Hz
	-	°C @ 50Hz

GENERAL DATA		
Frame Size	140TC	
Enclosure	TEFC	
Mounting	Rigid/C-Flange	
Approximate Weight (lbs.)	69.5 lbs.	
Casing Material / Fan Cover	Stainless Steel	Stainless Steel
Shaft Material	304 SS	
NEMA Design	B	
Degree of Protection (IP)	69K	
Insulation Class / Temp Rise (60Hz)	F	B
Tropicalization	YES	
Duty	Cont. / S1	
Conduit Box Location	F1	
Feet Removable / Double Drilled	NO	YES
Paintwork	unpainted	
	unpainted	
MECHANICAL DATA		
Bearing DE Side	6205 ZZ	
Bearing ODE Side	6204 ZZ	
Grease Type	Food grade Mobilgrease™ FM 222	
Compensation Ring (wavy washer)	NDE	
Moment of Inertia (lb-ft²)	-	
Sound Pressure @ 3 FT dBA	-	
SITE CONDITIONS		
Ambient Temperature (°C)	40	
Meters Above Sea Level (MASL)	1000	
HAZARDOUS LOCATIONS		
CSA Certified	A, B, C & D	
Temperature Code	-	-

NEMA

Model SSG0034FS-TC
MFG PN: TSSF140TC3U4B

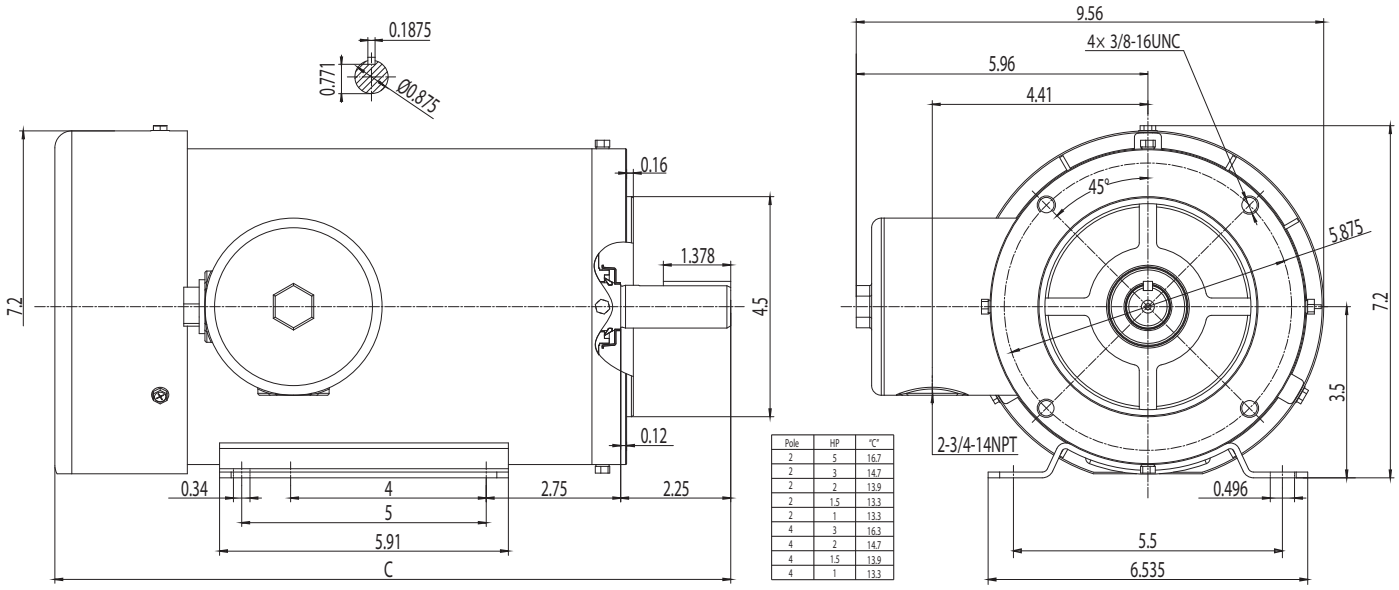

Pole	HP	°C
2	5	16.7
2	3	14.7
2	2	13.9
2	1.5	13.3
2	1	13.3
4	3	16.3
4	2	14.7
4	1.5	13.9
4	1	13.3

NAMEPLATE DATA	60Hz	50Hz
Horse Power	3	-
RPM	1750	-
Voltage	575	-
Full Load Amps	3.35	-
Service Factor	1.25	-
KVA Code	L	-
Full Load Amps (208V)	-	-
Nominal Efficiency	89.5	-
Nominal Power Factor	0.75	-
Design	B	
Frame	140TC	
Enclosure Type	TEFC	
IP Rating	69K	
Duty	Cont. / S1	
Insulation Class	F	
Ambient Rating	40	
Drive End Bearing	6205 ZZ	
Opposite Drive End Bearing	6204 ZZ	
Weight (lbs)	69.5	

NAMEPLATE LAYOUT

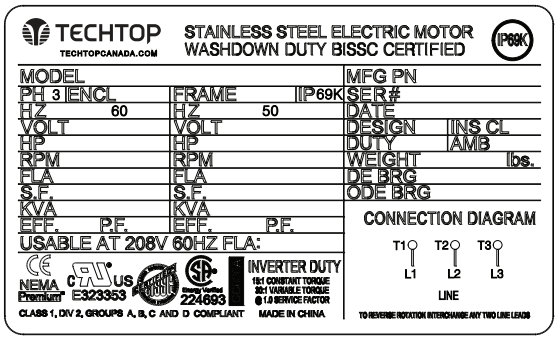

VFD DUTY (S.F. 1.0)	RATIO	Hz*
Variable Torque	30:1	2 - 60
Constant Torque	15:1	4 - 60

*For max speed please contact Techtop Canada

HAZARDOUS LOCATIONS	CSA COMPLIANT
Class / Division	Class I, Division II
Groups	A, B, C & D

Questions? **Call 1.888.286.1820**

NEMA

Model SSG0034FS-TC

MFG PN: TSSF140TC3U4B

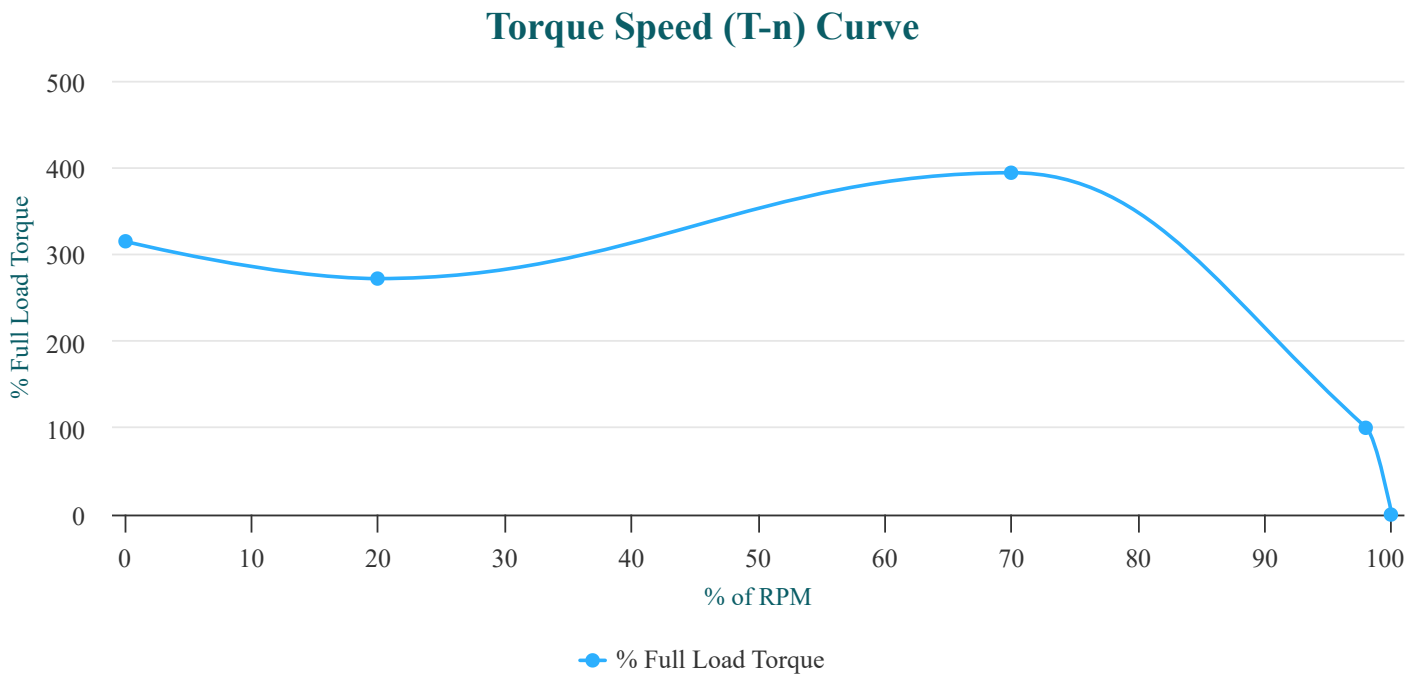

PERFORMANCE LOAD VALUES, HIGH VOLTAGE, 60Hz

TORQUE VALUES	TORQUE (lb-ft)	TORQUE (% FULL LOAD)
Locked Rotor Torque	28.4	315
Pull-Up Torque	24.5	272
Breakdown Torque	35.5	394
Full Load Torque	9	100

TYPICAL PERFORMANCE - NOT GUARANTEED VALUES

PERFORMANCE VALUES	
Start Configuration	DOL
Starting Current (A)	-
No-Load Current (A)	2.1
No-Load Power Factor	-

% OF RATED LOAD	25	50	75	100	125	S.F. 1.25
Line Amperes (A)	2.2	2.4	2.8	3.3	3.9	3.9
Efficiency (%)	78.1	85.8	87.6	87.7	86.9	86.9
Speed (r/min)	1788.0	1777.0	1764.0	1751.0	1736.0	1736.0
Power Factor (cosΦ)	0.33	0.53	0.67	0.76	0.81	0.81
Input Power (kW)	0.7	1.3	1.9	2.5	3.2	3.2

NEMA

Model SSG0034FS-TC

MFG PN: TSSF140TC3U4B

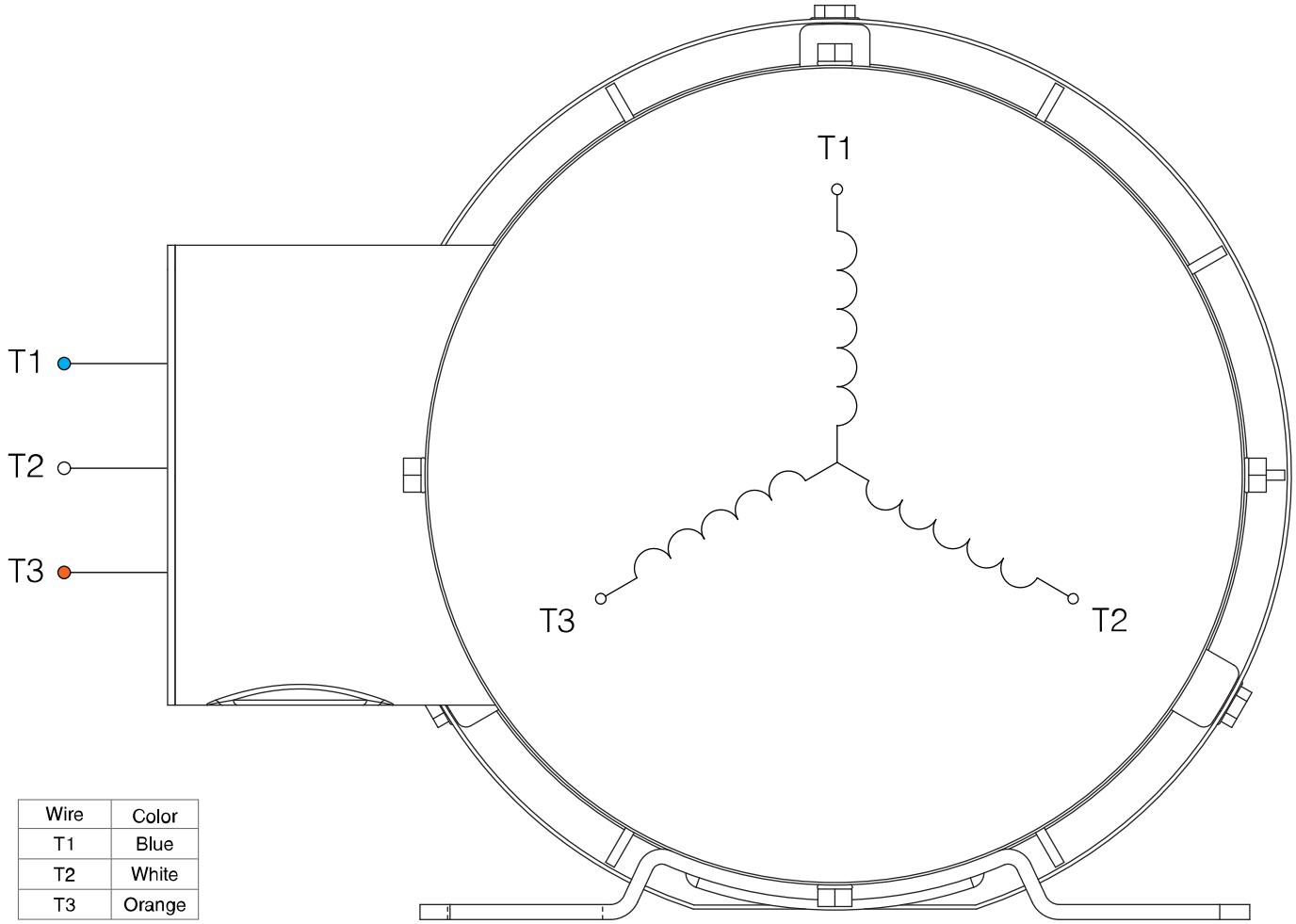

Wire	Color
T1	Blue
T2	White
T3	Orange

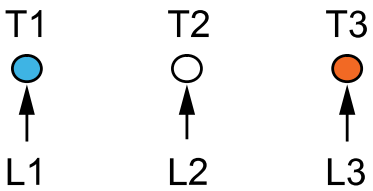

SINGLE VOLTAGE

NOTES:

1. CCW ROTATION FACING ODE FOR CONNECTIONS SHOWN
2. TO REVERSE ROTATION, SWAP ANY TWO INPUT LINES
3. WHEN MOTOR IS IN F1 POSITION, LEADS INDICATED WITH "*" EXIT THE CASING ABOVE THE CENTER LINE OF THE MOTOR, THE REMAINING LEADS EXIT BELOW THE CENTER LINE
4. LEADS MUST BE NUMBERED AND COLORED AS SHOWN
5. DIAGRAMS FOR REFERENCE ONLY

TECHTOP
You can't top a Techtop.

NEMA 3Ø Y 3-Lead Single Voltage

DRAWING NUMBER:	NEMA-3-3-Y-SS
CONNECTION:	Y
NUMBER OF LEADS:	3
THERMAL PROTECTION:	-

ISSUED DATE	21/11/25

STAINLESS STEEL IP69K MOTORS

NEMA

Model SSG0034FS-TC

MFG PN: TSSF140TC3U4B

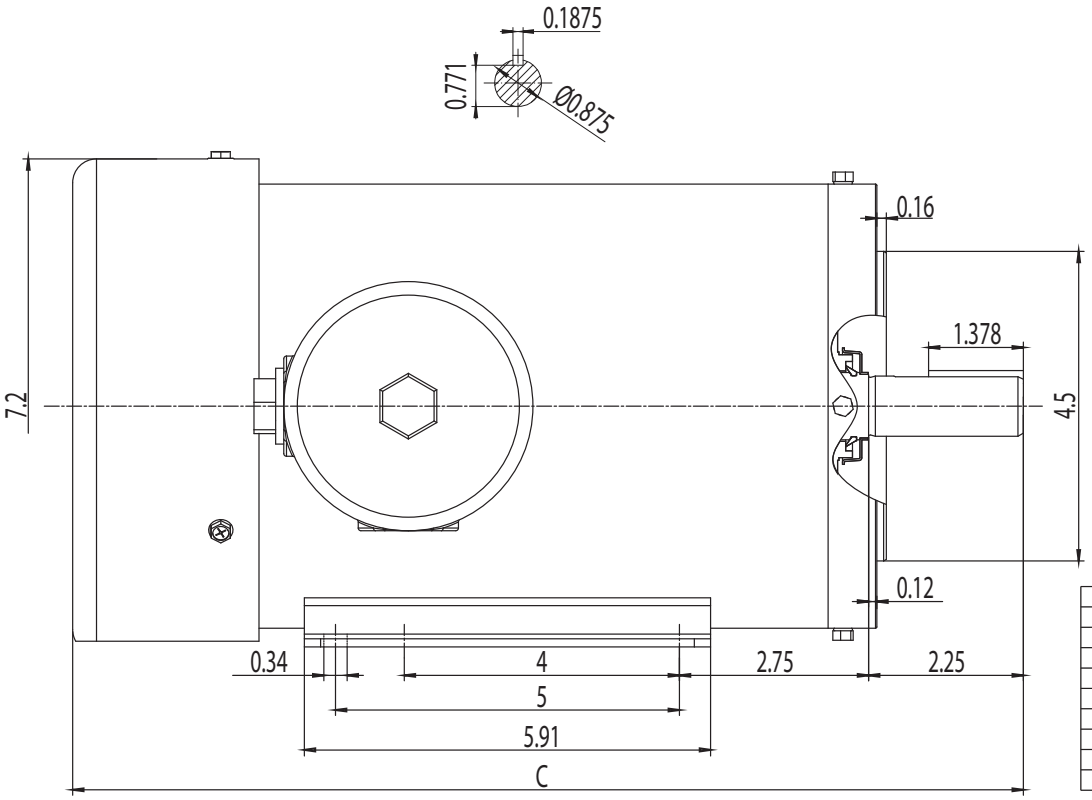

Pole	HP	"C"
2	5	16.7
2	3	14.7
2	2	13.9
2	1.5	13.3
2	1	13.3
4	3	16.3
4	2	14.7
4	1.5	13.9
4	1	13.3

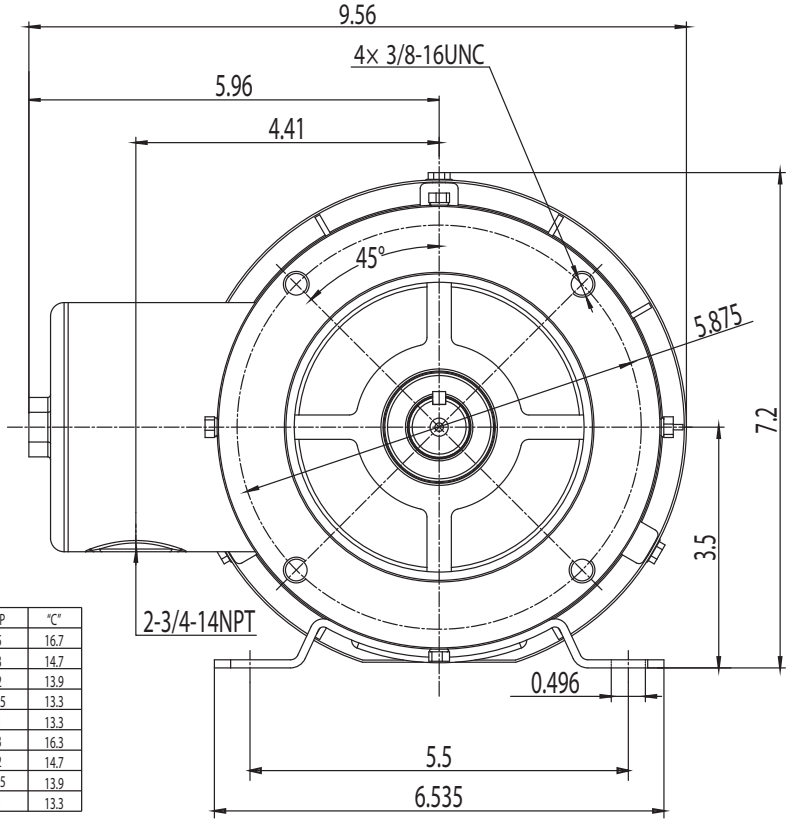

TECHTOP
You can't top a Techtop.

NEMA Premium TEFC 140TC

DRAWING NUMBER:	SS3-TF-140TC	ISSUED DATE	21/11/25
DIMENSIONS:	Inches		
MOUNTING:	Rigid/C-Flange	STAINLESS STEEL IP69K MOTORS	
CASING MATERIAL:	Stainless Steel		