NEMA | **Model GRA0154F-01**
MFG PN: T254T15U4B

Model **GRA0154F-01**

Product Data Package

MODEL	HP	RPM	VOLTAGE	PHASE	Hz	FRAME	MOUNT	ENCLOSURE
GRA0154F-01	15	1770	575	3	60	254T	Rigid	TEFC

Toronto

TOLL FREE 1.888.286.1820
PHONE 905.829.1001
EMAIL info@techtopcanada.com

Montreal

TOLL FREE 1.844.354.5111
PHONE 514.354.1002
EMAIL infoQC@techtopcanada.com

Moncton

PHONE 506.386.5794
EMAIL infoNB@techtopcanada.com

Winnipeg

PHONE 204.633.2779
EMAIL infoMB@techtopcanada.com

Vancouver

PHONE 604.525.1551
EMAIL infoBC@techtopcanada.com

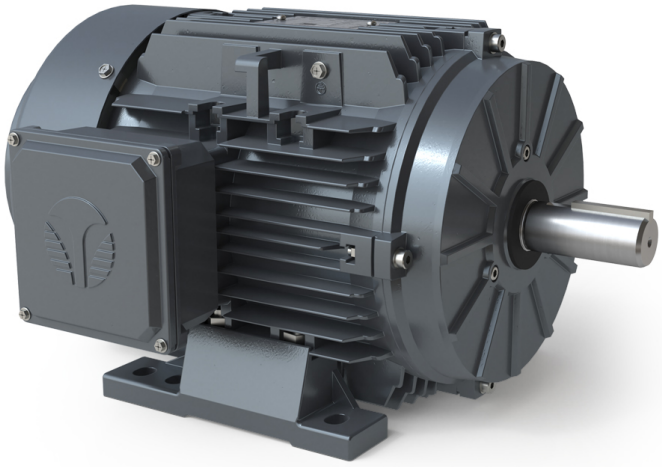

Index

Motor General Data Sheet P 2
Nameplate Information P 3
Technical Performance Data P 4
Motor General Wiring Diagram P 5
Motor General Outline Drawing P 6

NEMA | Model GRA0154F-01

MFG PN: T254T15U4B

ELECTRICAL DATA		
Rated Motor Output Power	15	HP
	-	kW
Rated Motor Speed	1770	r/min 60Hz
	-	r/min 50Hz
Rated Motor Voltage (+/-10%)	575	V/60Hz
	-	V/50Hz
Rated Motor Current	14.40	A (I_n) @ 60Hz
	-	A (I_n) @ 50Hz
Phase	3	Ø
Locked Rotor Current @ High Voltage	135.86	A (I_n) @ 60Hz
FI Current @ 208V	-	A (I_n) @ 60Hz
Service Factor	1.25	@ 60Hz
	-	@ 50Hz
KVA Code	K	60Hz
	-	50Hz
Nominal Efficiency	92.4	% @ 60Hz
Nominal Power Factor	0.83	cosΦ @ 60Hz
Leads (Qty, Size)	6	14
Connection	D	–
Coil Resistance	-	Ω
Start Capacitor	-	µF/V
Run Capacitor	-	µF/V
VFD DUTY (S.F. 1.0)	**RATIO**	**Hz**
Variable Torque	30:1	2 - 60
Constant Torque	15:1	4 - 60
FULL LOAD TEMPERATURE RISE		
Full Load Temperature Rise	-	°C @ 60Hz
	-	°C @ 50Hz

GENERAL DATA		
Frame Size	254T	
Enclosure	TEFC	
Mounting	Rigid	
Approximate Weight (lbs.)	197.5 lbs.	
Casing Material / Fan Cover	Cast Aluminum	Steel
Shaft Material	1045	
NEMA Design	A	
Degree of Protection (IP)	55	
Insulation Class / Temp Rise (60Hz)	F	B
Tropicalization	YES	
Duty	Cont. / S1	
Conduit Box Location	F1	
Feet Removable / Double Drilled	YES	NO
Paintwork	7024	
	Graphite Gray	
MECHANICAL DATA		
Bearing DE Side	6309 ZZ	
Bearing ODE Side	6209 ZZ	
Grease Type	Mobil Polyrex EM	
Compensation Ring (wavy washer)	NDE	
Moment of Inertia (lb-ft^2)	-	
Sound Pressure @ 3 FT dBA	75.6	
SITE CONDITIONS		
Ambient Temperature (°C)	40	
Meters Above Sea Level (MASL)	1000	
HAZARDOUS LOCATIONS		
CSA Certified	A, B, C & D	
Temperature Code	T3	-

NEMA | Model GRA0154F-01

MFG PN: T254T15U4B

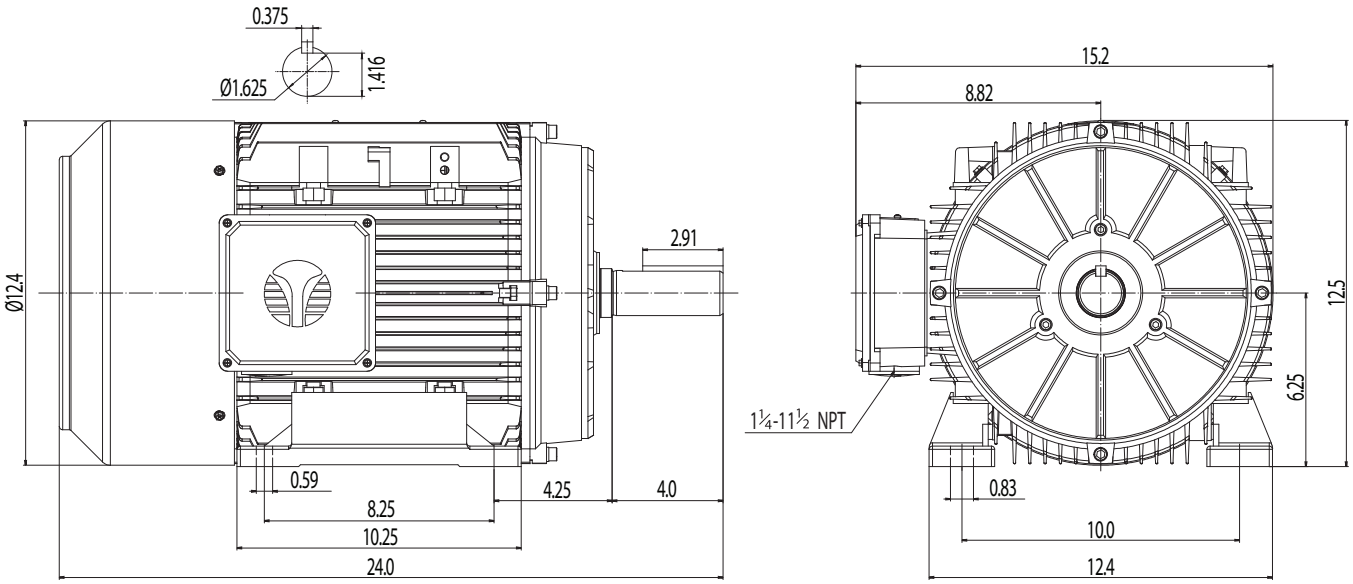

NAMEPLATE DATA	60Hz	50Hz
Horse Power	15	15
RPM	1770	-
Voltage	575	-
Full Load Amps	14.40	-
Service Factor	1.25	-
KVA Code	K	-
Full Load Amps (208V)	-	-
Nominal Efficiency	92.4	-
Nominal Power Factor	0.83	-
Design	A	
Frame	254T	
Enclosure Type	TEFC	
IP Rating	55	
Duty	Cont. / S1	
Insulation Class	F	
Ambient Rating	40	
Drive End Bearing	6309 ZZ	
Opposite Drive End Bearing	6209 ZZ	
Weight (lbs)	197.5	

NAMEPLATE LAYOUT

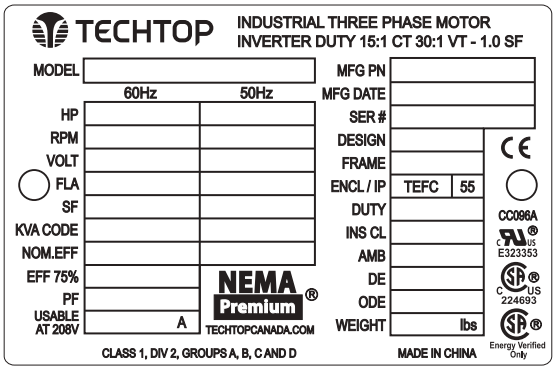

VFD DUTY (S.F. 1.0)	RATIO	Hz*
Variable Torque	30:1	2 - 60
Constant Torque	15:1	4 - 60

*For max speed please contact Techtop Canada

HAZARDOUS LOCATIONS	CSA CERTIFIED
Class / Division	Class I, Div. 2
Groups	A, B, C & D

Questions? **Call 1.888.286.1820**

NEMA

Model GRA0154F-01

MFG PN: T254T15U4B

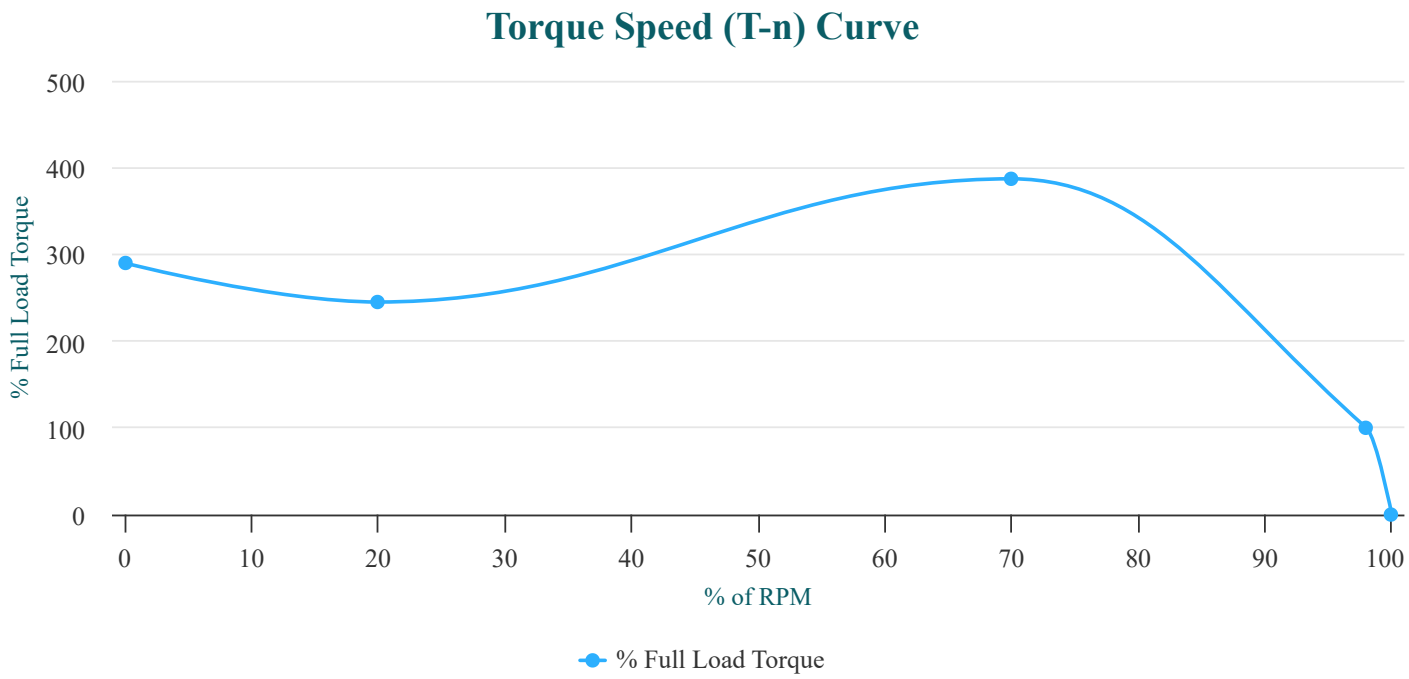

PERFORMANCE LOAD VALUES, HIGH VOLTAGE, 60Hz

TORQUE VALUES	TORQUE (lb-ft)	TORQUE (% FULL LOAD)
Locked Rotor Torque	129.1	290
Pull-Up Torque	109	245
Breakdown Torque	172.2	387
Full Load Torque	44.5	100

TYPICAL PERFORMANCE - NOT GUARANTEED VALUES

PERFORMANCE VALUES	
Start Configuration	DOL
Starting Current (A)	135.86
No-Load Current (A)	6.7
No-Load Power Factor	-

% OF RATED LOAD	25	50	75	100	125	S.F. 1.25
Line Amperes (A)	7.4	9.3	11.8	14.6	17.8	17.8
Efficiency (%)	86.2	91.3	92.5	92.6	92.3	92.3
Speed (r/min)	1794	1789	1783	1776	1769	1769
Power Factor (cosΦ)	0.45	0.67	0.78	0.84	0.86	0.86
Input Power (kW)	3.28	6.19	9.16	12.2	15.31	15.31

NEMA

Model GRA0154F-01

MFG PN: T254T15U4B

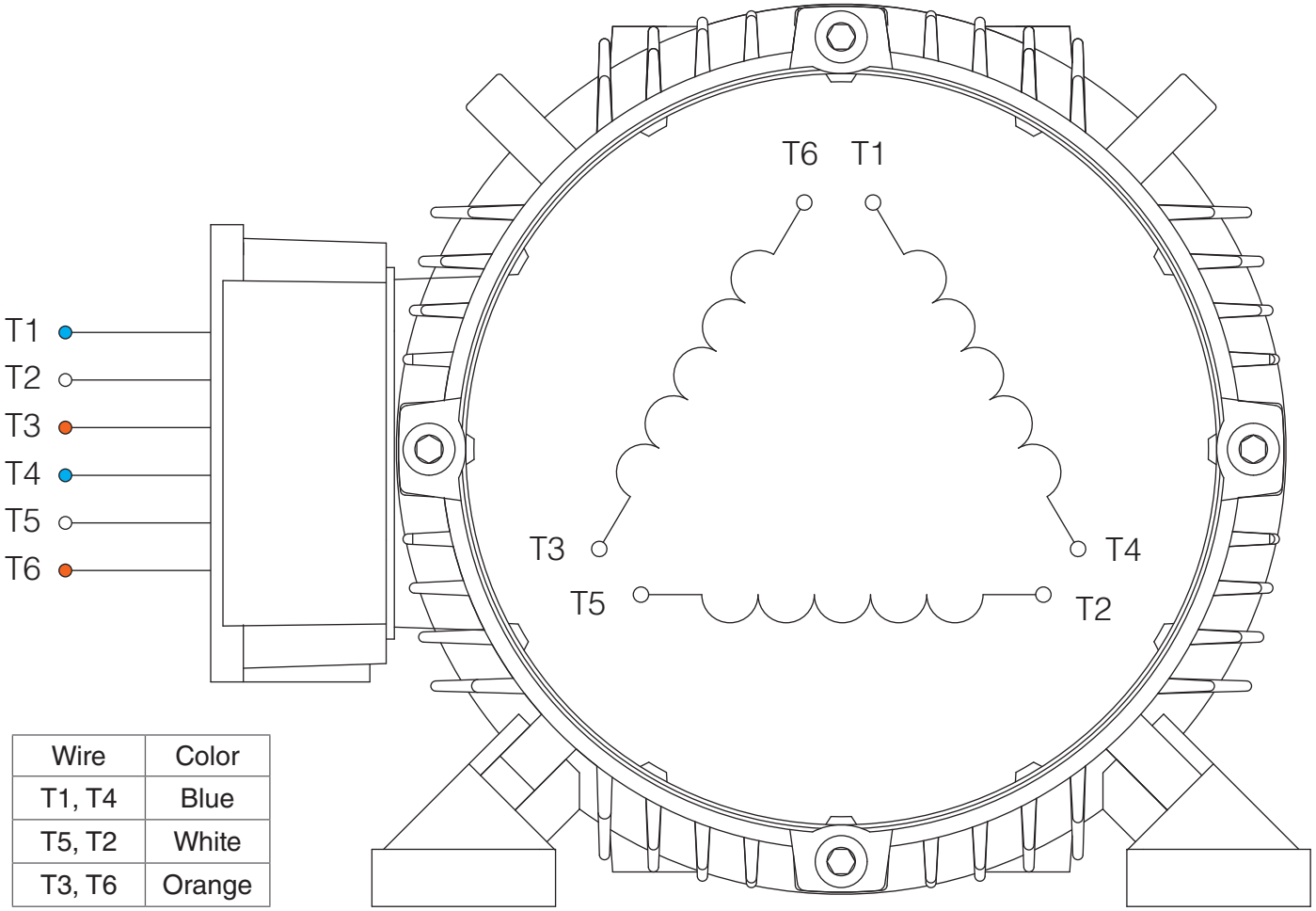

Wire	Color
T1, T4	Blue
T5, T2	White
T3, T6	Orange

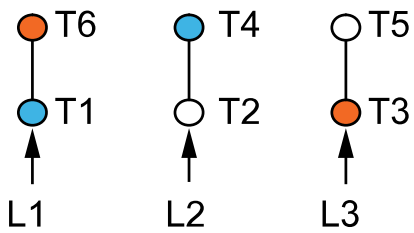

SINGLE VOLTAGE

NOTES:

1. CCW ROTATION FACING ODE FOR CONNECTIONS SHOWN
2. TO REVERSE ROTATION, SWAP ANY TWO INPUT LINES
3. WHEN MOTOR IS IN F1 POSITION, LEADS INDICATED WITH "*" EXIT THE CASING ABOVE THE CENTER LINE OF THE MOTOR, THE REMAINING LEADS EXIT BELOW THE CENTER LINE
4. LEADS MUST BE NUMBERED AND COLORED AS SHOWN
5. DIAGRAMS FOR REFERENCE ONLY

TECHTOP
You can't top a Techtop.

NEMA 3Ø D 6-Lead Single Voltage

DRAWING NUMBER:	NEMA-3-6-D
CONNECTION:	D
NUMBER OF LEADS:	6
THERMAL PROTECTION:	-

ISSUED DATE	13/02/25

PREMIUM T-FRAME ALUMINUM MOTORS

NEMA

Model GRA0154F-01

MFG PN: T254T15U4B

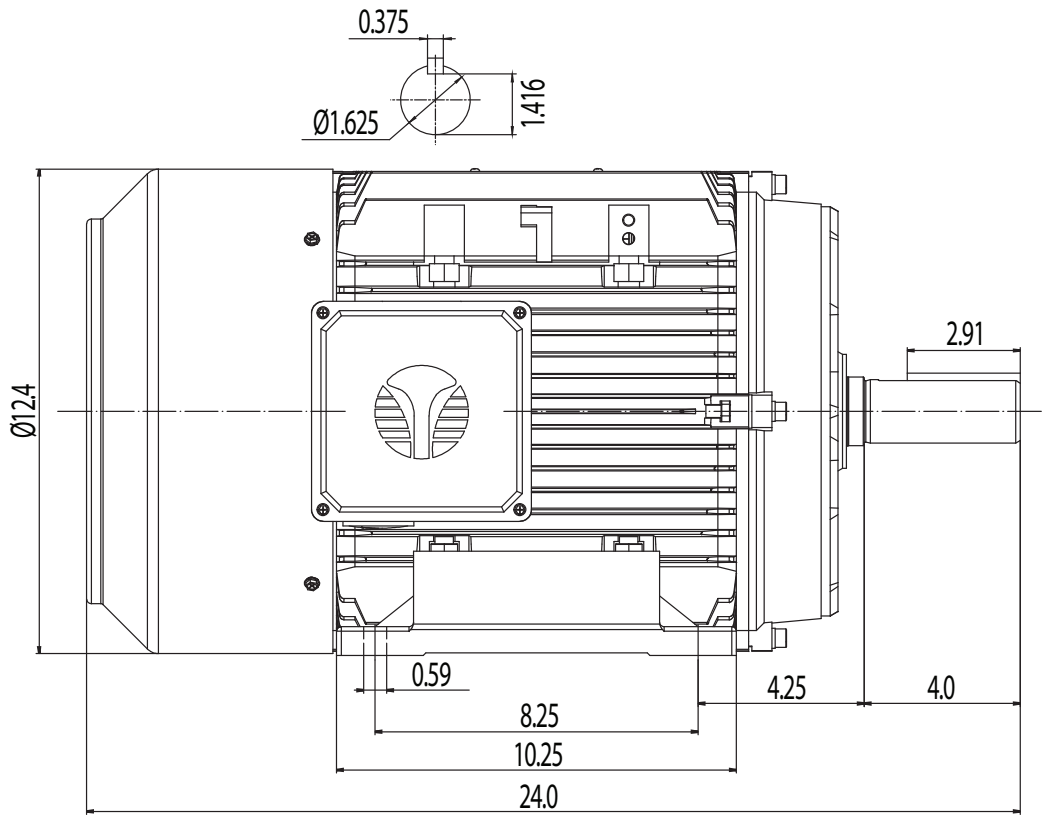

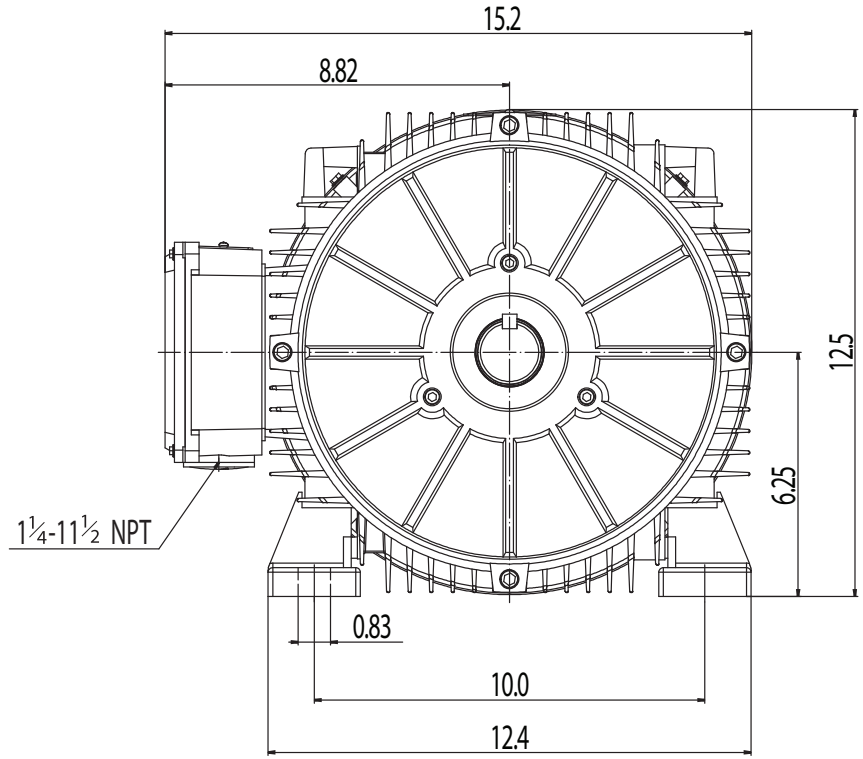

TECHTOP
You can't top a Techtop.

NEMA Premium TEFC 254T

DRAWING NUMBER:	GR3-AL-TF-254T-01	ISSUED DATE	13/02/25
DIMENSIONS:	Inches		
MOUNTING:	Rigid	PREMIUM T-FRAME ALUMINUM MOTORS	
CASING MATERIAL:	Cast Aluminum		