NEMA | **Model GPS0002C-01**
MFG PN: SLF56H1Z2L

Model **GPS0002C-01**

Product Data Package

MODEL	HP	RPM	VOLTAGE	PHASE	Hz	FRAME	MOUNT	ENCLOSURE
GPS0002C-01	1	3460	115/208-230	1	60	56H	Rigid	TEFC

Toronto

TOLL FREE 1.888.286.1820
PHONE 905.829.1001
EMAIL info@techtopcanada.com

Montreal

TOLL FREE 1.844.354.5111
PHONE 514.354.1002
EMAIL infoQC@techtopcanada.com

Moncton

PHONE 506.386.5794
EMAIL infoNB@techtopcanada.com

Winnipeg

PHONE 204.633.2779
EMAIL infoMB@techtopcanada.com

Vancouver

PHONE 604.525.1551
EMAIL infoBC@techtopcanada.com

Index

Motor General Data Sheet P 2
Nameplate Information P 3
Technical Performance Data P 4
Motor General Wiring Diagram P 5
Motor General Outline Drawing P 6

NEMA

Model GPS0002C-01
MFG PN: SLF56H1Z2L

ELECTRICAL DATA		
Rated Motor Output Power	1	HP
	-	kW
Rated Motor Speed	3460	r/min 60Hz
	-	r/min 50Hz
Rated Motor Voltage (+/-10%)	115/208-230	V/60Hz
	-	V/50Hz
Rated Motor Current	9.6/5.3-4.8	A (I_n) @ 60Hz
	-	A (I_n) @ 50Hz
Phase	1	Ø
Locked Rotor Current @ High Voltage	31.72	A (I_n) @ 60Hz
FI Current @ 208V	5.3	A (I_n) @ 60Hz
Service Factor	1.15	@ 60Hz
	-	@ 50Hz
KVA Code	J	60Hz
	-	50Hz
Nominal Efficiency	74	% @ 60Hz
Nominal Power Factor	0.93	cosΦ @ 60Hz
Leads (Qty, Size)	6	14
Connection	-	–
Coil Resistance	-	Ω
Start Capacitor	400/165	µF/V
Run Capacitor	80/250	µF/V
VFD DUTY (S.F. 1.0)	**RATIO**	**Hz**
Variable Torque	-	-
Constant Torque	-	-
FULL LOAD TEMPERATURE RISE		
Full Load Temperature Rise	57.4	°C @ 60Hz
	-	°C @ 50Hz

GENERAL DATA		
Frame Size	56H	
Enclosure	TEFC	
Mounting	Rigid	
Approximate Weight (lbs.)	35 lbs.	
Casing Material / Fan Cover	Rolled Steel	Steel
Shaft Material	1045	
NEMA Design	L	
Degree of Protection (IP)	54	
Insulation Class / Temp Rise (60Hz)	F	B
Tropicalization	NO	
Duty	Cont. / S1	
Conduit Box Location	F1	
Feet Removable / Double Drilled	NO	YES
Paintwork	7024	
	Graphite Gray	
MECHANICAL DATA		
Bearing DE Side	6204 2RS	
Bearing ODE Side	6203 2RS	
Grease Type	Mobil Polyrex EM	
Compensation Ring (wavy washer)	NDE	
Moment of Inertia (lb-ft^2)	-	
Sound Pressure @ 3 FT dBA	-	
SITE CONDITIONS		
Ambient Temperature (°C)	40	
Meters Above Sea Level (MASL)	1000	
HAZARDOUS LOCATIONS		
CSA Certified	-	
Temperature Code	-	-

NEMA

Model GPS0002C-01
MFG PN: SLF56H1Z2L

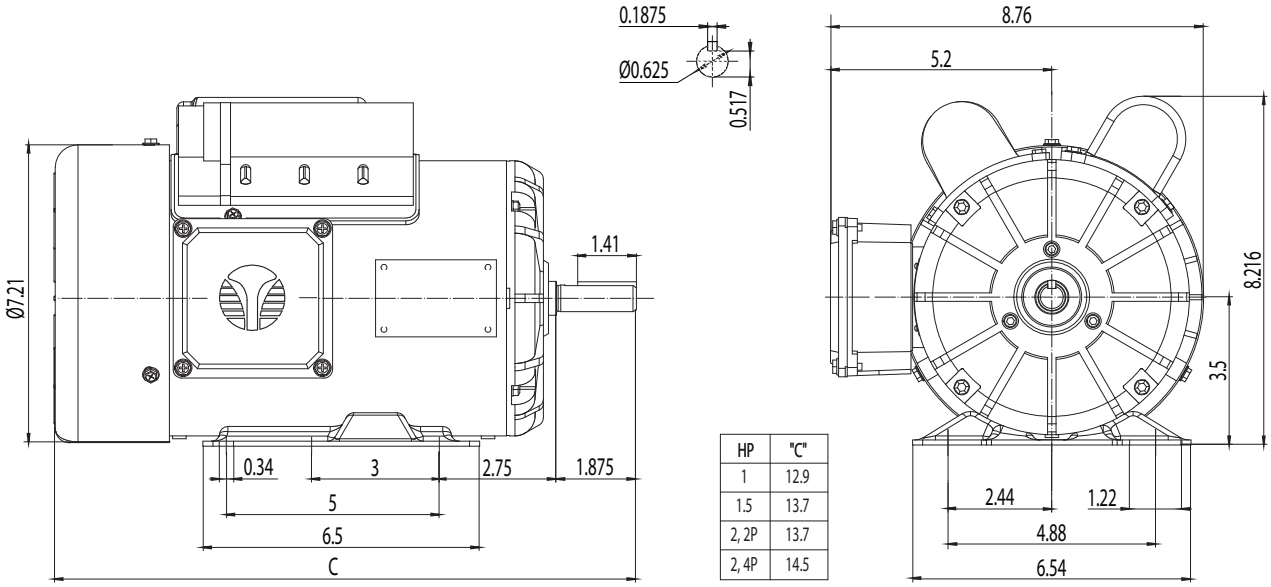

HP	"C"
1	12.9
1.5	13.7
2, 2P	13.7
2, 4P	14.5

NAMEPLATE DATA	60Hz	50Hz
Horse Power	1	-
RPM	3460	-
Voltage	115/208-230	-
Full Load Amps	9.6/5.3-4.8	-
Service Factor	1.15	-
KVA Code	J	-
Full Load Amps (208V)	5.3	-
Nominal Efficiency	74	-
Nominal Power Factor	0.93	-
Design	L	
Frame	56H	
Enclosure Type	TEFC	
IP Rating	54	
Duty	Cont. / S1	
Insulation Class	F	
Ambient Rating	40	
Drive End Bearing	6204 2RS	
Opposite Drive End Bearing	6203 2RS	
Weight (lbs)	35	

NAMEPLATE LAYOUT

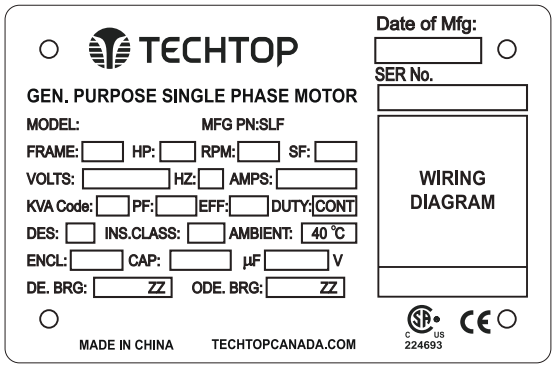

CAPACITOR DATA	µF	VOLTAGE
Start Capacitor	400	165
Run Capacitor	80	250

*For max speed please contact Techtop Canada

HAZARDOUS LOCATIONS	-
Class / Division	-
Groups	-

Questions? **Call 1.888.286.1820**

NEMA

Model GPS0002C-01

MFG PN: SLF56H1Z2L

PERFORMANCE LOAD VALUES, HIGH VOLTAGE, 60Hz

TYPICAL PERFORMANCE - NOT GUARANTEED VALUES

TORQUE VALUES	TORQUE (lb-ft)	TORQUE (% FULL LOAD)	PERFORMANCE VALUES	
Locked Rotor Torque	1.5	279	Start Configuration	DOL
Pull-Up Torque	4	261	Starting Current (A)	31.72
Breakdown Torque	4.8	314	No-Load Current (A)	2.2
Full Load Torque	4.2	100	No-Load Power Factor	-

% OF RATED LOAD	25	50	75	100	125	S.F. 1.15
Line Amperes (A)	-	-	-	4.9	-	5.3
Efficiency (%)	-	-	-	69.4	-	71.9
Speed (r/min)	-	-	-	3508	-	3490
Power Factor (cosΦ)	-	-	-	0.97	-	0.99
Input Power (kW)	-	-	-	-	-	-

NEMA

Model GPS0002C-01

MFG PN: SLF56H1Z2L

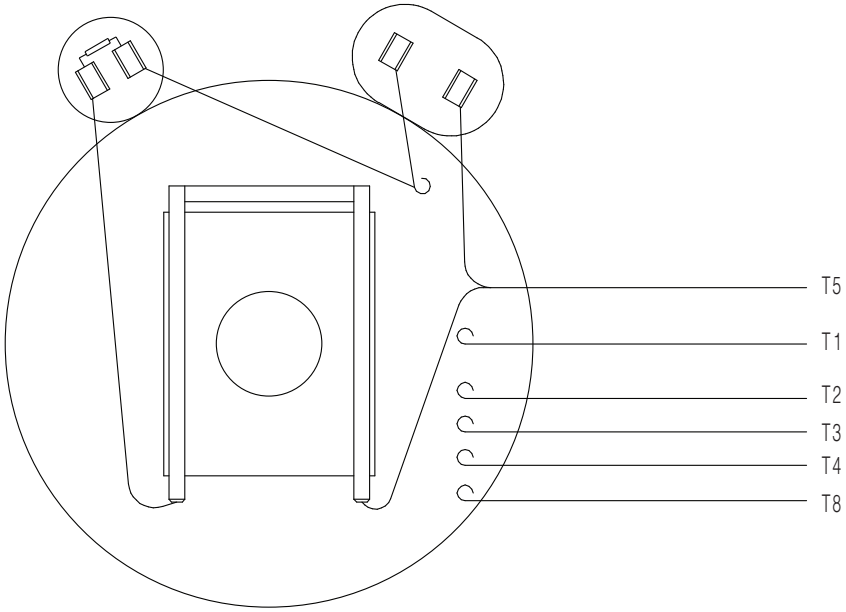

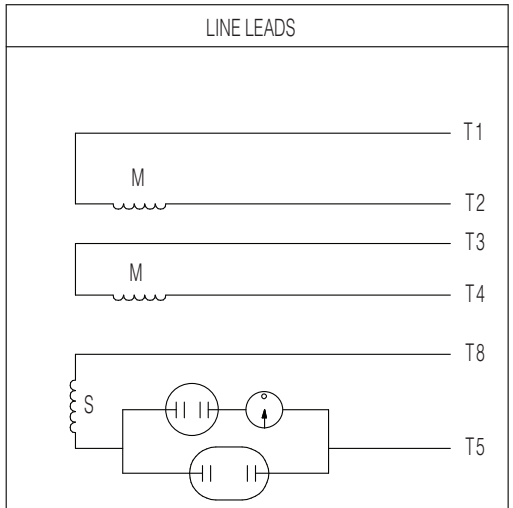

VOLTAGE	ROTATION FACING LEAD END	L1	L2	JOIN
HIGH	CCW	T1	T4, T5	T2&T3&T8
	CW	T1	T4, T8	T2&T3&T5
LOW	CCW	T1,T3,T8	T2,T4,T5	--
	CW	T1,T3,T5	T2,T4,T8	--

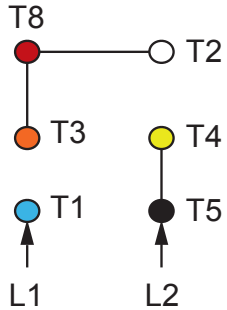

HIGH VOLTAGE

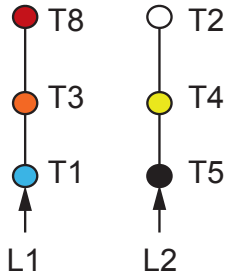

LOW VOLTAGE

TECHTOP
You can't top a Techtop.

NEMA 1Ø General Purpose Dual Voltage

DRAWING NUMBER:	NEMA-GP-56-140T
CONNECTION:	-
NUMBER OF LEADS:	6
THERMAL PROTECTION:	Optional

ISSUED DATE	01/08/25

GENERAL PURPOSE SINGLE PHASE MOTORS

NEMA

Model GPS0002C-01

MFG PN: SLF56H1Z2L

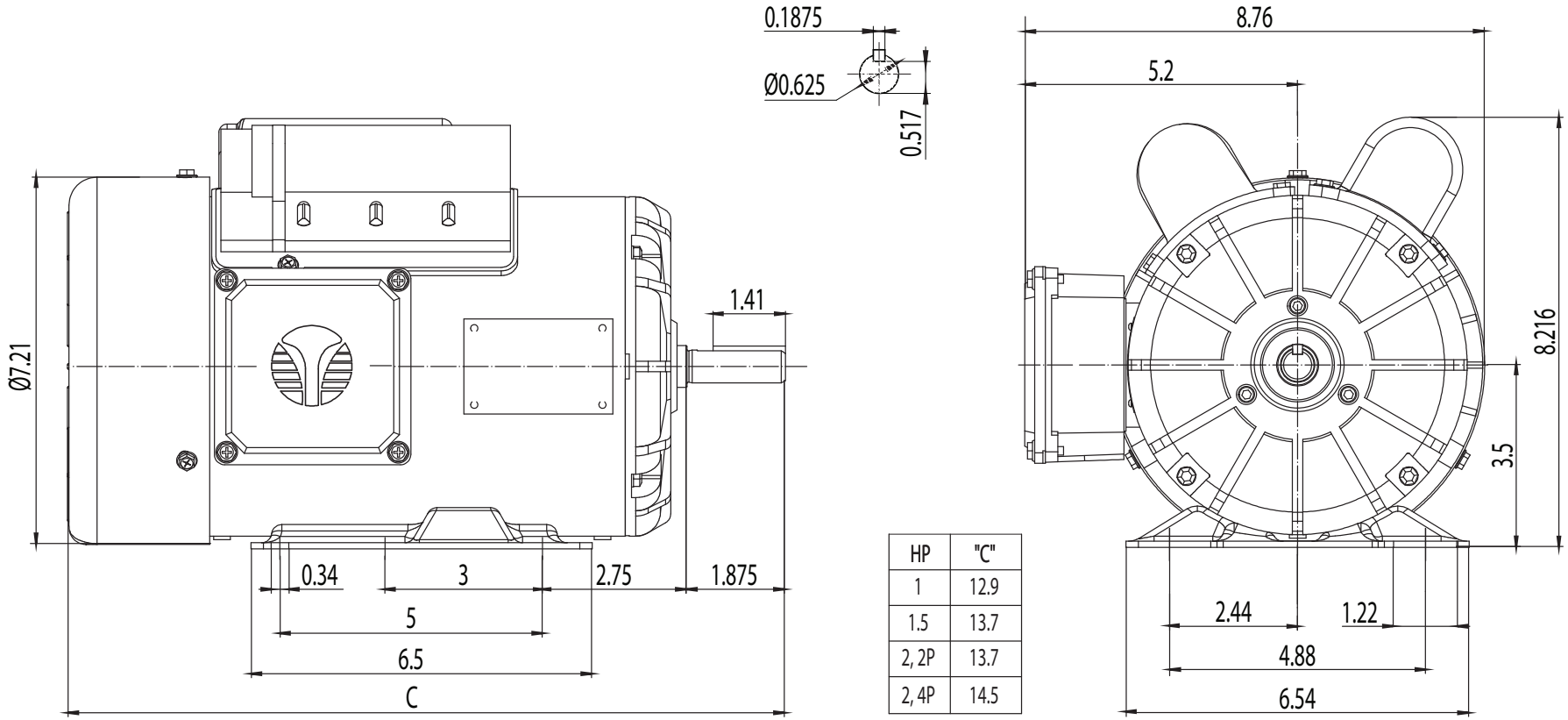

HP	"C"
1	12.9
1.5	13.7
2, 2P	13.7
2, 4P	14.5

TECHTOP
You can't top a Techtop.

TEFC 56H

DRAWING NUMBER:	BL1-RS-TF-56H-01	**ISSUED DATE**	01/08/25
DIMENSIONS:	Inches		
MOUNTING:	Rigid	GENERAL PURPOSE SINGLE PHASE MOTORS	
CASING MATERIAL:	Rolled Steel		