NEMA | **Model DPC1502ES**
MFG PN: TDC 405TS150U2B

Model **DPC1502ES**

Product Data Package

MODEL	HP	RPM	VOLTAGE	PHASE	Hz	FRAME	MOUNT	ENCLOSURE
DPC1502ES	150	3570	460	3	60	405TS	Rigid	ODP

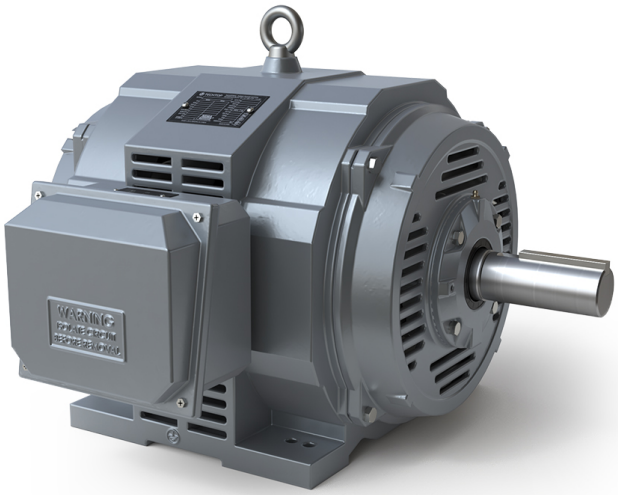

Toronto

TOLL FREE 1.888.286.1820
PHONE 905.829.1001
EMAIL info@techtopcanada.com

Montreal

TOLL FREE 1.844.354.5111
PHONE 514.354.1002
EMAIL infoQC@techtopcanada.com

Moncton

PHONE 506.386.5794
EMAIL infoNB@techtopcanada.com

Winnipeg

PHONE 204.633.2779
EMAIL infoMB@techtopcanada.com

Vancouver

PHONE 604.525.1551
EMAIL infoBC@techtopcanada.com

Index

Motor General Data Sheet P 2
Nameplate Information P 3
Technical Performance Data P 4
Motor General Wiring Diagram P 5
Motor General Outline Drawing P 6

NEMA

Model DPC1502ES
MFG PN: TDC 405TS150U2B

ELECTRICAL DATA		
Rated Motor Output Power	150	HP
	111	kW
Rated Motor Speed	3570	r/min 60Hz
	2955	r/min 50Hz
Rated Motor Voltage (+/-10%)	460	V/60Hz
	380	V/50Hz
Rated Motor Current	165.84	A (I_n) @ 60Hz
	203.13	A (I_n) @ 50Hz
Phase	3	Ø
Locked Rotor Current @ High Voltage	1273	A (I_n) @ 60Hz
FI Current @ 208V	-	A (I_n) @ 60Hz
Service Factor	1.15	@ 60Hz
	1	@ 50Hz
KVA Code	J	60Hz
	G	50Hz
Nominal Efficiency	94.1	% @ 60Hz
Nominal Power Factor	0.9	cosΦ @ 60Hz
Leads (Qty, Size)	6	2
Connection	D	–
Coil Resistance	-	Ω
Start Capacitor	-	µF/V
Run Capacitor	-	µF/V
VFD DUTY (S.F. 1.0)	**RATIO**	**Hz**
Variable Torque	30:1	2 - 60
Constant Torque	15:1	4 - 60
FULL LOAD TEMPERATURE RISE		
Full Load Temperature Rise	39.5	°C @ 60Hz
	-	°C @ 50Hz

GENERAL DATA		
Frame Size	405TS	
Enclosure	ODP	
Mounting	Rigid	
Approximate Weight (lbs.)	994 lbs.	
Casing Material / Fan Cover	Cast Iron	-
Shaft Material	1045	
NEMA Design	A	
Degree of Protection (IP)	23	
Insulation Class / Temp Rise (60Hz)	F	B
Tropicalization	YES	
Duty	Cont. / S1	
Conduit Box Location	F1	
Feet Removable / Double Drilled	NO	YES
Paintwork	7024	
	Graphite Gray	
MECHANICAL DATA		
Bearing DE Side	6314 C3	
Bearing ODE Side	6314 C3	
Grease Type	Mobil Polyrex EM	
Compensation Ring (wavy washer)	NDE	
Moment of Inertia (lb-ft^2)	-	
Sound Pressure @ 3 FT dBA	-	
SITE CONDITIONS		
Ambient Temperature (°C)	40	
Meters Above Sea Level (MASL)	1000	
HAZARDOUS LOCATIONS		
CSA Certified	-	
Temperature Code	-	-

Questions? **Call 1.888.286.1820**

NEMA

Model DPC1502ES
MFG PN: TDC 405TS150U2B

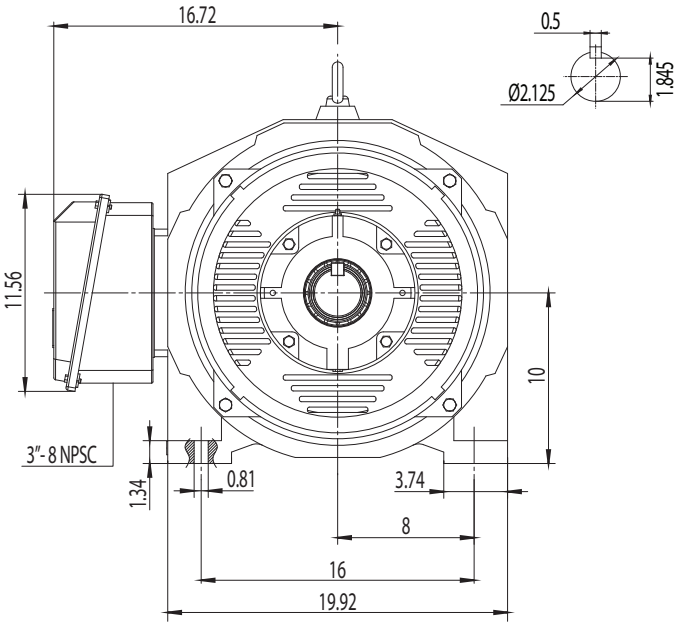

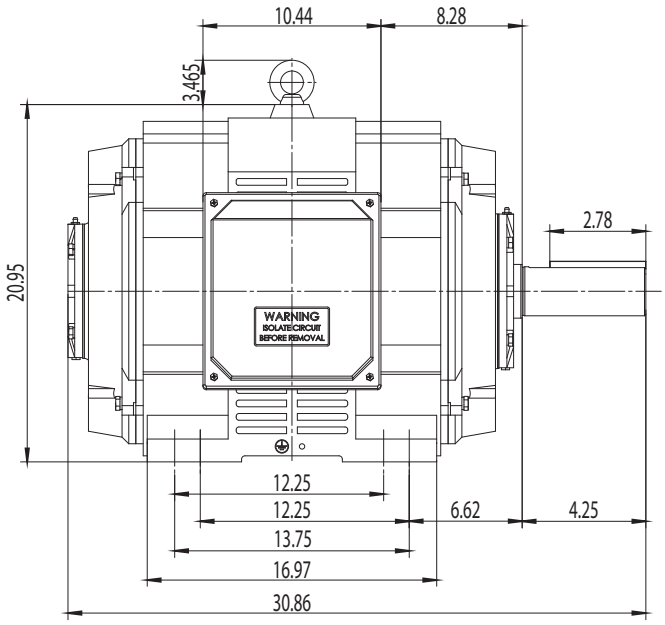

NAMEPLATE DATA	60Hz	50Hz
Horse Power	150	150
RPM	3570	2955
Voltage	460	380
Full Load Amps	165.84	203.13
Service Factor	1.15	1
KVA Code	J	G
Full Load Amps (208V)	-	-
Nominal Efficiency	94.1	93
Nominal Power Factor	0.9	0.9
Design	A	
Frame	405TS	
Enclosure Type	ODP	
IP Rating	23	
Duty	Cont. / S1	
Insulation Class	F	
Ambient Rating	40	
Drive End Bearing	6314 C3	
Opposite Drive End Bearing	6314 C3	
Weight (lbs)	994	

NAMEPLATE LAYOUT

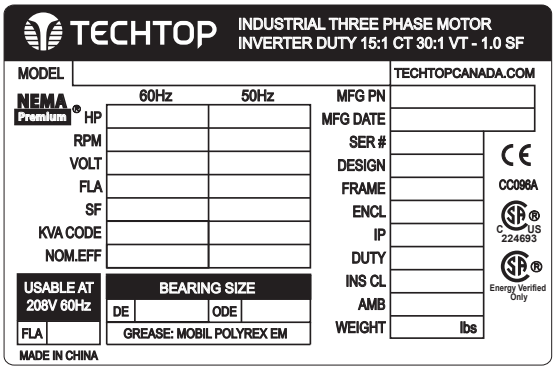

VFD DUTY (S.F. 1.0)	RATIO	Hz*
Variable Torque	30:1	2 - 60
Constant Torque	15:1	4 - 60

*For max speed please contact Techtop Canada

HAZARDOUS LOCATIONS	-
Class / Division	-
Groups	-

Questions? **Call 1.888.286.1820**

NEMA

Model DPC1502ES

MFG PN: TDC 405TS150U2B

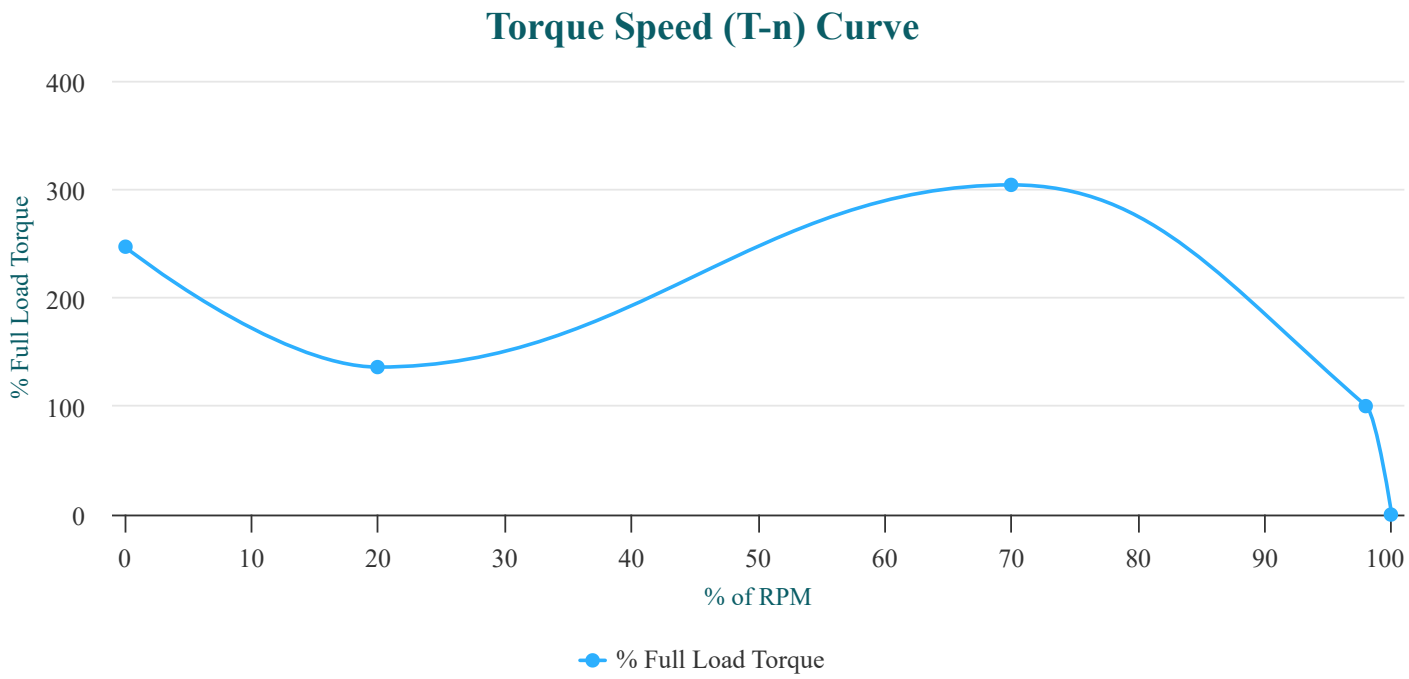

PERFORMANCE LOAD VALUES, HIGH VOLTAGE, 60Hz

TORQUE VALUES	TORQUE (lb-ft)	TORQUE (% FULL LOAD)
Locked Rotor Torque	545.3	247
Pull-Up Torque	300.2	136
Breakdown Torque	671.2	304
Full Load Torque	220.8	100

TYPICAL PERFORMANCE - NOT GUARANTEED VALUES

PERFORMANCE VALUES	
Start Configuration	DOL
Starting Current (A)	1273
No-Load Current (A)	43.7
No-Load Power Factor	-

% OF RATED LOAD	25	50	75	100	125	S.F. 1.15
Line Amperes (A)	58.9	89.7	125.2	164.3	206	206
Efficiency (%)	91.7	94.5	94.9	94.7	94.2	94.2
Speed (r/min)	3592	3585	3576	3567	3557	3557
Power Factor (cosΦ)	0.64	0.81	0.87	0.89	0.89	0.89
Input Power (kW)	29.99	58.19	86.9	116.15	146.02	146.02

NEMA

Model DPC1502ES

MFG PN: TDC 405TS150U2B

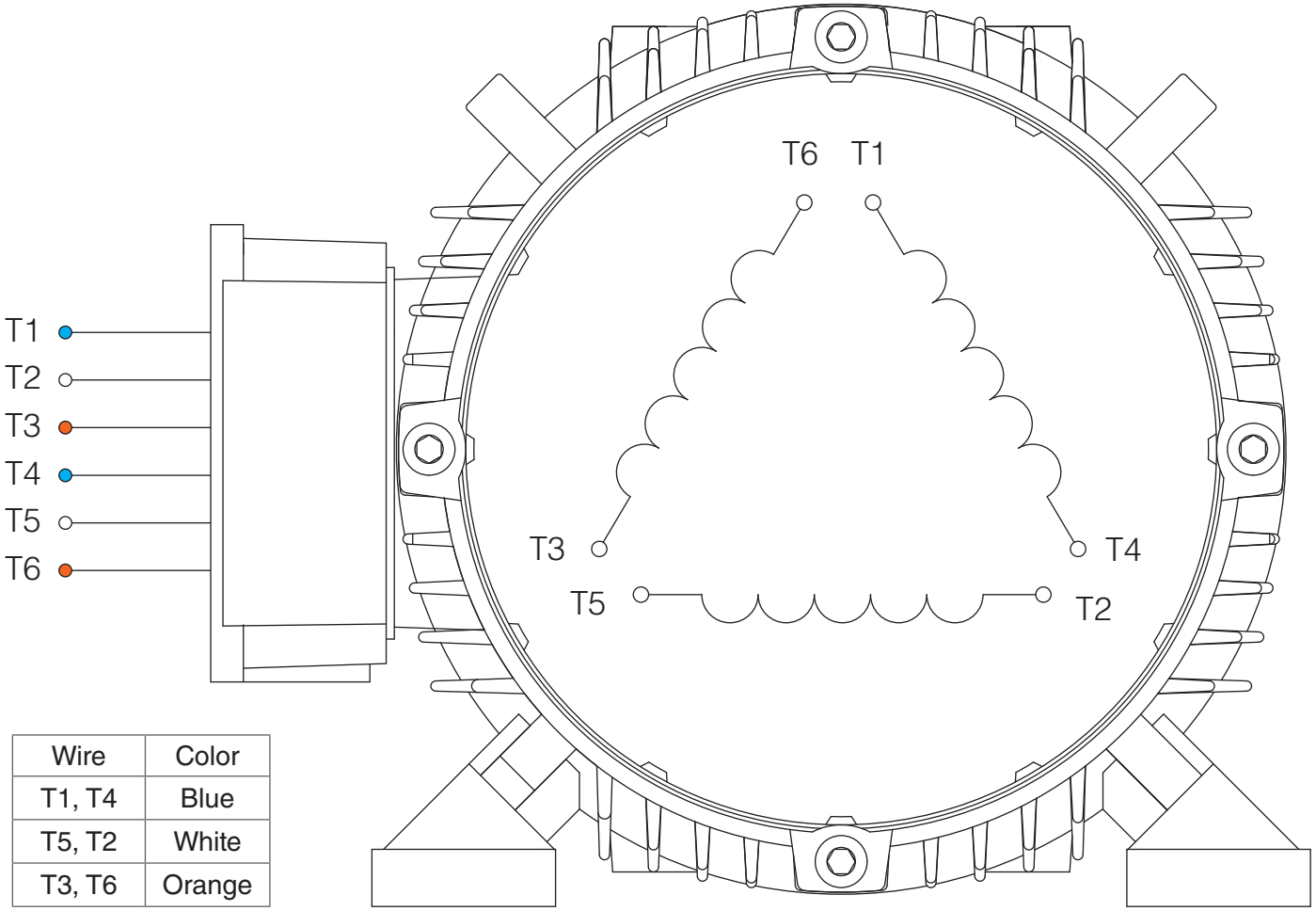

Wire	Color
T1, T4	Blue
T5, T2	White
T3, T6	Orange

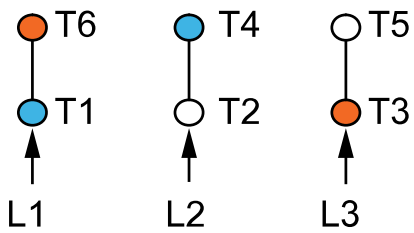

SINGLE VOLTAGE

NOTES:

1. CCW ROTATION FACING ODE FOR CONNECTIONS SHOWN
2. TO REVERSE ROTATION, SWAP ANY TWO INPUT LINES
3. WHEN MOTOR IS IN F1 POSITION, LEADS INDICATED WITH "*" EXIT THE CASING ABOVE THE CENTER LINE OF THE MOTOR, THE REMAINING LEADS EXIT BELOW THE CENTER LINE
4. LEADS MUST BE NUMBERED AND COLORED AS SHOWN
5. DIAGRAMS FOR REFERENCE ONLY

TECHTOP
You can't top a Techtop.

NEMA 3Ø D 6-Lead Single Voltage

DRAWING NUMBER:	NEMA-3-6-D
CONNECTION:	D
NUMBER OF LEADS:	6
THERMAL PROTECTION:	-

ISSUED DATE	27/06/25

PREMIUM T-FRAME ALUMINUM & CAST IRON MOTORS, ODP

NEMA

Model DPC1502ES

MFG PN: TDC 405TS150U2B

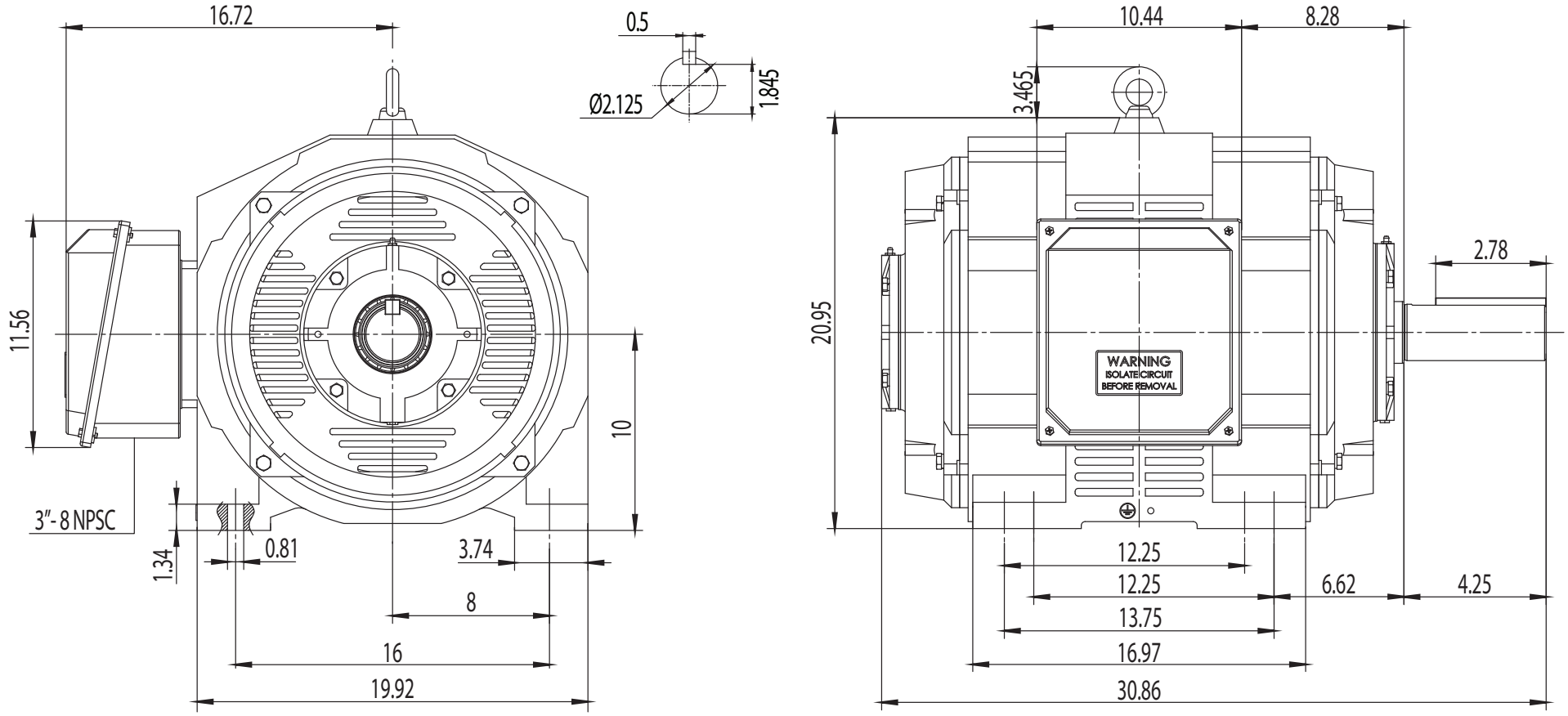

TECHTOP
You can't top a Techtop.

NEMA Premium ODP 405TS

DRAWING NUMBER:	GR3-CI-DP-404(5)TS	ISSUED DATE	27/06/25
DIMENSIONS:	Inches		
MOUNTING:	Rigid	PREMIUM T-FRAME ALUMINUM & CAST IRON MOTORS, ODP	
CASING MATERIAL:	Cast Iron		