NEMA | **Model DPC1006D-TC**
MFG PN: TDC 444T100U6B

Model **DPC1006D-TC**

Product Data Package

MODEL	HP	RPM	VOLTAGE	PHASE	Hz	FRAME	MOUNT	ENCLOSURE
DPC1006D-TC	100	1190	230/460	3	60	444TC	Rigid/C-Flange	ODP

Toronto

TOLL FREE 1.888.286.1820
PHONE 905.829.1001
EMAIL info@techtopcanada.com

Montreal

TOLL FREE 1.844.354.5111
PHONE 514.354.1002
EMAIL infoQC@techtopcanada.com

Moncton

PHONE 506.386.5794
EMAIL infoNB@techtopcanada.com

Winnipeg

PHONE 204.633.2779
EMAIL infoMB@techtopcanada.com

Vancouver

PHONE 604.525.1551
EMAIL infoBC@techtopcanada.com

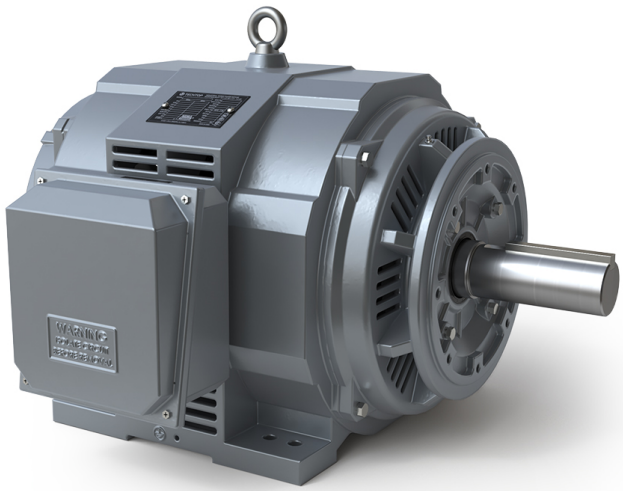

Index

Motor General Data Sheet P 2
Nameplate Information P 3
Technical Performance Data P 4
Motor General Wiring Diagram P 5
Motor General Outline Drawing P 6

NEMA

Model DPC1006D-TC
MFG PN: TDC 444T100U6B

ELECTRICAL DATA		
Rated Motor Output Power	100	HP
	75	kW
Rated Motor Speed	1190	r/min 60Hz
	985	r/min 50Hz
Rated Motor Voltage (+/-10%)	230/460	V/60Hz
	190/380	V/50Hz
Rated Motor Current	229.21/114.61	A (I_n) @ 60Hz
	280.42/140.21	A (I_n) @ 50Hz
Phase	3	Ø
Locked Rotor Current @ High Voltage	1088	A (I_n) @ 60Hz
FI Current @ 208V	253.46	A (I_n) @ 60Hz
Service Factor	1.15	@ 60Hz
	1	@ 50Hz
KVA Code	H	60Hz
	G	50Hz
Nominal Efficiency	95	% @ 60Hz
Nominal Power Factor	0.86	cosΦ @ 60Hz
Leads (Qty, Size)	12	4
Connection	DD/D	–
Coil Resistance	-	Ω
Start Capacitor	-	µF/V
Run Capacitor	-	µF/V
VFD DUTY (S.F. 1.0)	**RATIO**	**Hz**
Variable Torque	30:1	2 - 60
Constant Torque	15:1	4 - 60
FULL LOAD TEMPERATURE RISE		
Full Load Temperature Rise	34.5	°C @ 60Hz
	-	°C @ 50Hz

GENERAL DATA		
Frame Size	444TC	
Enclosure	ODP	
Mounting	Rigid/C-Flange	
Approximate Weight (lbs.)	1546 lbs.	
Casing Material / Fan Cover	Cast Iron	-
Shaft Material	4140	
NEMA Design	A	
Degree of Protection (IP)	23	
Insulation Class / Temp Rise (60Hz)	F	B
Tropicalization	YES	
Duty	Cont. / S1	
Conduit Box Location	F1	
Feet Removable / Double Drilled	NO	YES
Paintwork	7024	
	Graphite Gray	
MECHANICAL DATA		
Bearing DE Side	NU 319	
Bearing ODE Side	6316 C3	
Grease Type	Mobil Polyrex EM	
Compensation Ring (wavy washer)	NDE	
Moment of Inertia (lb-ft^2)	-	
Sound Pressure @ 3 FT dBA	-	
SITE CONDITIONS		
Ambient Temperature (°C)	40	
Meters Above Sea Level (MASL)	1000	
HAZARDOUS LOCATIONS		
CSA Certified	-	
Temperature Code	-	-

NEMA | Model DPC1006D-TC

MFG PN: TDC 444T100U6B

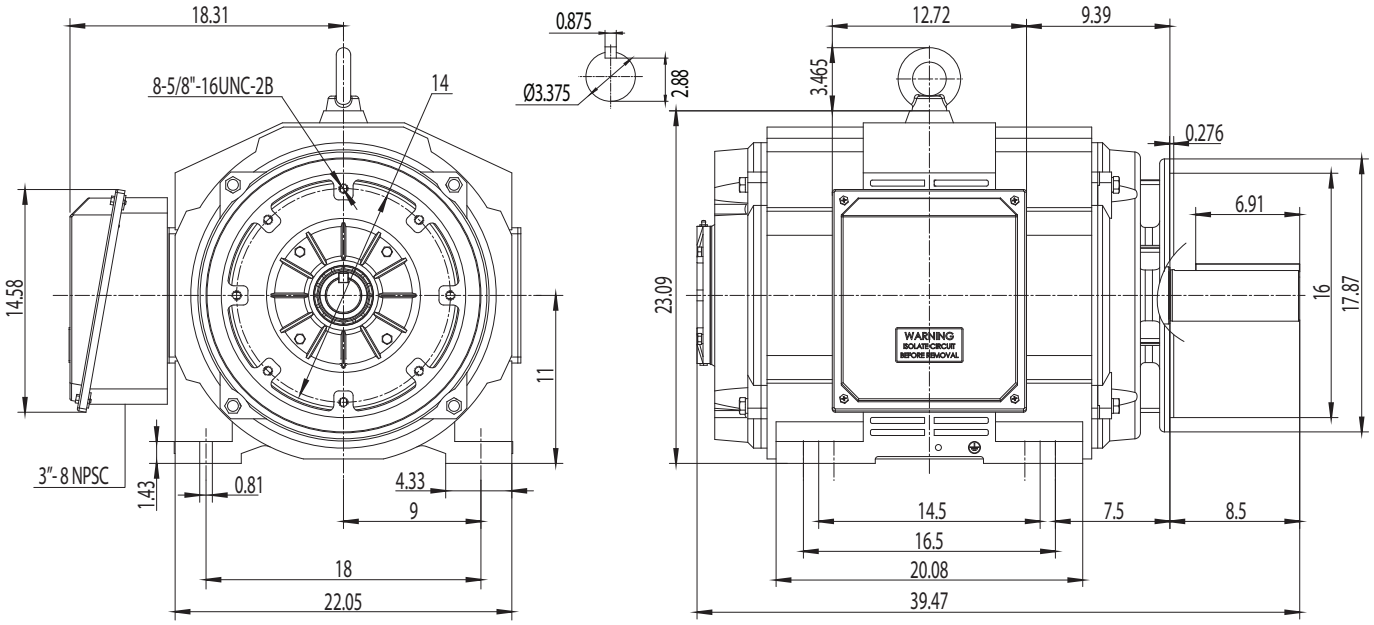

NAMEPLATE DATA	60Hz	50Hz
Horse Power	100	100
RPM	1190	985
Voltage	230/460	190/380
Full Load Amps	229.21/114.61	280.42/140.21
Service Factor	1.15	1
KVA Code	H	G
Full Load Amps (208V)	253.46	-
Nominal Efficiency	95	94
Nominal Power Factor	0.86	0.86
Design	A	
Frame	444TC	
Enclosure Type	ODP	
IP Rating	23	
Duty	Cont. / S1	
Insulation Class	F	
Ambient Rating	40	
Drive End Bearing	NU 319	
Opposite Drive End Bearing	6316 C3	
Weight (lbs)	1546	

NAMEPLATE LAYOUT

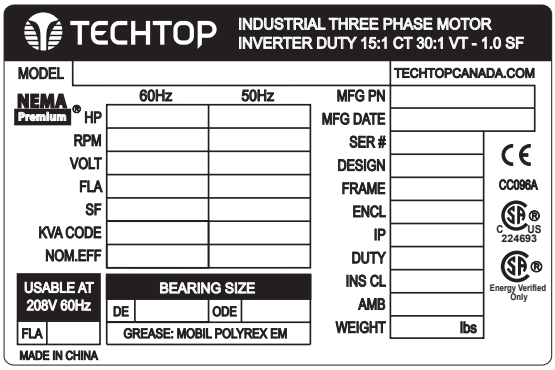

VFD DUTY (S.F. 1.0)	RATIO	Hz*
Variable Torque	30:1	2 - 60
Constant Torque	15:1	4 - 60

*For max speed please contact Techtop Canada

HAZARDOUS LOCATIONS	-
Class / Division	-
Groups	-

Questions? **Call 1.888.286.1820**

NEMA

Model DPC1006D-TC

MFG PN: TDC 444T100U6B

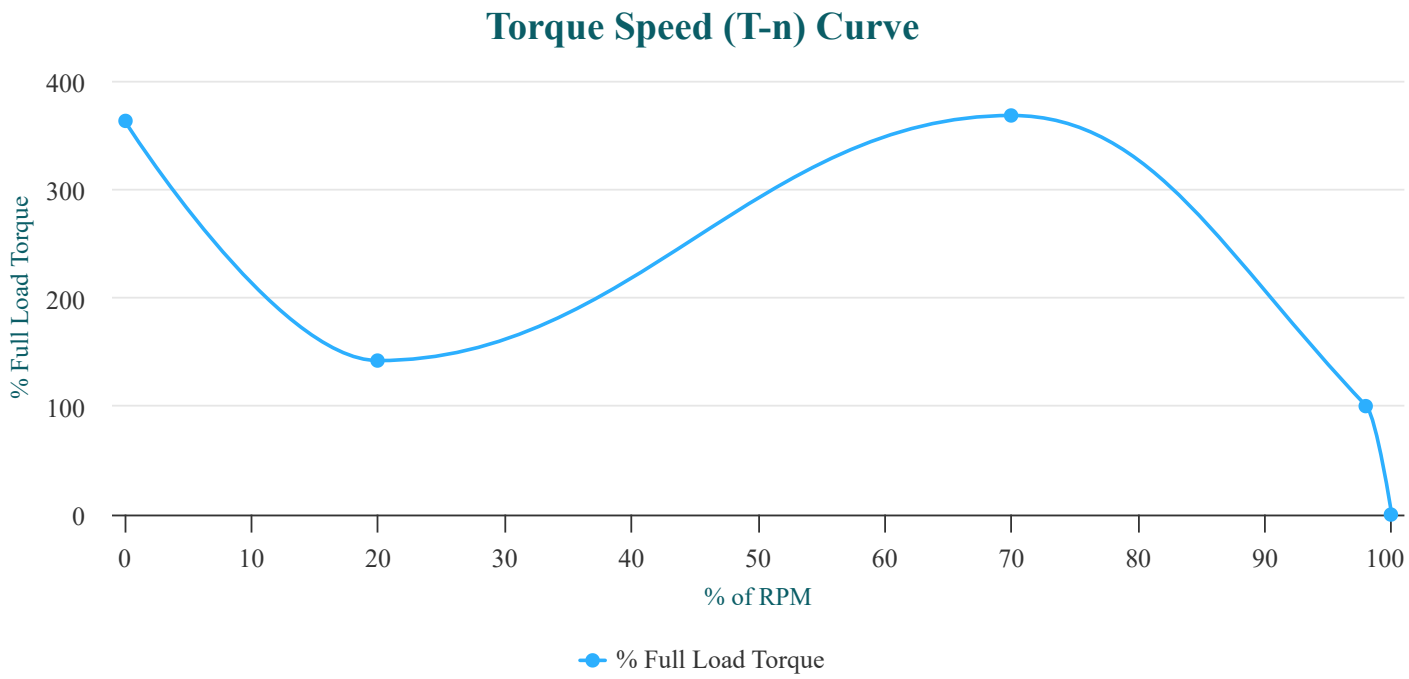

PERFORMANCE LOAD VALUES, HIGH VOLTAGE, 60Hz

TORQUE VALUES	TORQUE (lb-ft)	TORQUE (% FULL LOAD)
Locked Rotor Torque	1602.8	363
Pull-Up Torque	627	142
Breakdown Torque	1624.8	368
Full Load Torque	441.5	100

TYPICAL PERFORMANCE - NOT GUARANTEED VALUES

PERFORMANCE VALUES	
Start Configuration	DOL
Starting Current (A)	1088
No-Load Current (A)	40.2
No-Load Power Factor	-

% OF RATED LOAD	25	50	75	100	125	S.F. 1.15
Line Amperes (A)	48.6	67.3	90.1	116	144.2	144.2
Efficiency (%)	92.2	95	95.5	95.4	95.1	95.1
Speed (r/min)	1198	1197	1195	1193	1191	1191
Power Factor (cosΦ)	0.53	0.74	0.82	0.85	0.86	0.86
Input Power (kW)	20.34	39.48	58.88	78.59	98.63	98.63

NEMA

Model DPC1006D-TC

MFG PN: TDC 444T100U6B

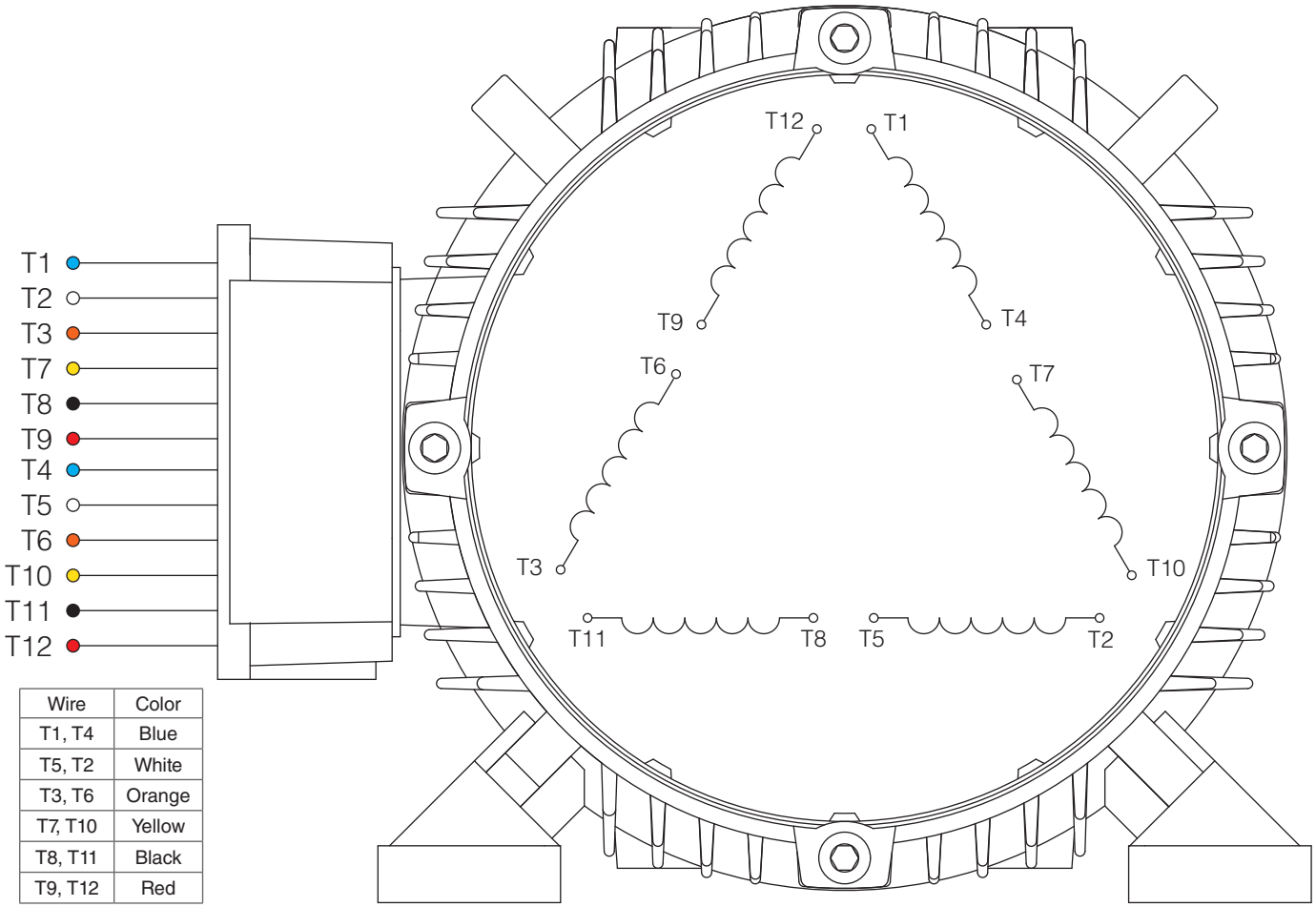

Wire	Color
T1, T4	Blue
T5, T2	White
T3, T6	Orange
T7, T10	Yellow
T8, T11	Black
T9, T12	Red

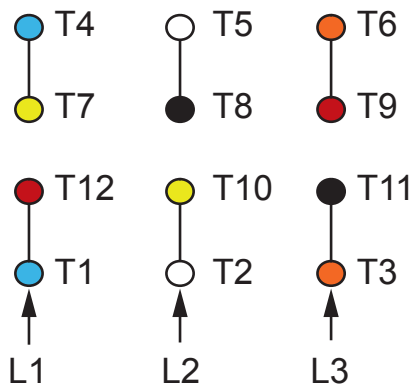

HIGH VOLTAGE
(Δ)

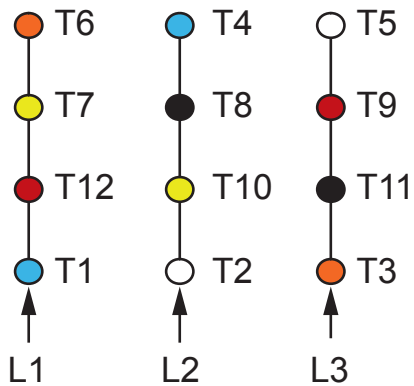

LOW VOLTAGE
(ΔΔ)

NOTES:

1. CCW ROTATION FACING ODE FOR CONNECTIONS SHOWN
2. TO REVERSE ROTATION, SWAP ANY TWO INPUT LINES
3. WHEN MOTOR IS IN F1 POSITION, LEADS INDICATED WITH "*" EXIT THE CASING ABOVE THE CENTER LINE OF THE MOTOR, THE REMAINING LEADS EXIT BELOW THE CENTER LINE
4. LEADS MUST BE NUMBERED AND COLORED AS SHOWN
5. DIAGRAMS FOR REFERENCE ONLY

TECHTOP
You can't top a Techtop.

NEMA 3Ø DD/D 12-Lead Dual Voltage

DRAWING NUMBER:	NEMA-3-12-DD-D
CONNECTION:	DD/D
NUMBER OF LEADS:	12
THERMAL PROTECTION:	-

ISSUED DATE	27/06/25

PREMIUM T-FRAME ALUMINUM & CAST IRON MOTORS, ODP

NEMA

Model DPC1006D-TC

MFG PN: TDC 444T100U6B

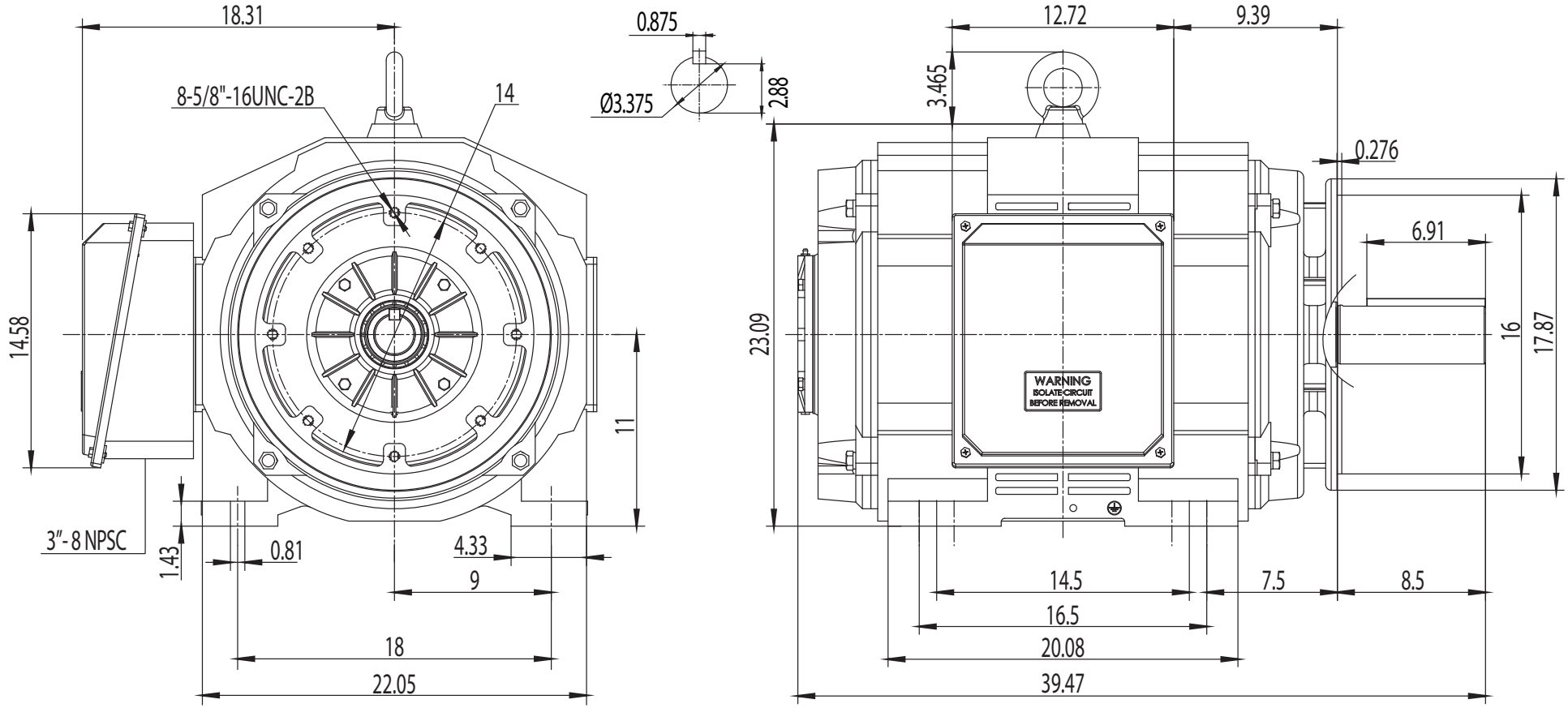

TECHTOP
You can't top a Techtop.

NEMA Premium ODP 444TC

DRAWING NUMBER:	GR3-CI-DP-444(5)TC	ISSUED DATE	27/06/25
DIMENSIONS:	Inches		
MOUNTING:	Rigid/C-Flange	PREMIUM T-FRAME ALUMINUM & CAST IRON MOTORS, ODP	
CASING MATERIAL:	Cast Iron		