NEMA | **Model DPA0202D**
MFG PN: TDA 254T20U2B

Model **DPA0202D**

Product Data Package

MODEL	HP	RPM	VOLTAGE	PHASE	Hz	FRAME	MOUNT	ENCLOSURE
DPA0202D	20	3540	230/460	3	60	254T	Rigid	ODP

Toronto

TOLL FREE 1.888.286.1820
PHONE 905.829.1001
EMAIL info@techtopcanada.com

Montreal

TOLL FREE 1.844.354.5111
PHONE 514.354.1002
EMAIL infoQC@techtopcanada.com

Moncton

PHONE 506.386.5794
EMAIL infoNB@techtopcanada.com

Winnipeg

PHONE 204.633.2779
EMAIL infoMB@techtopcanada.com

Vancouver

PHONE 604.525.1551
EMAIL infoBC@techtopcanada.com

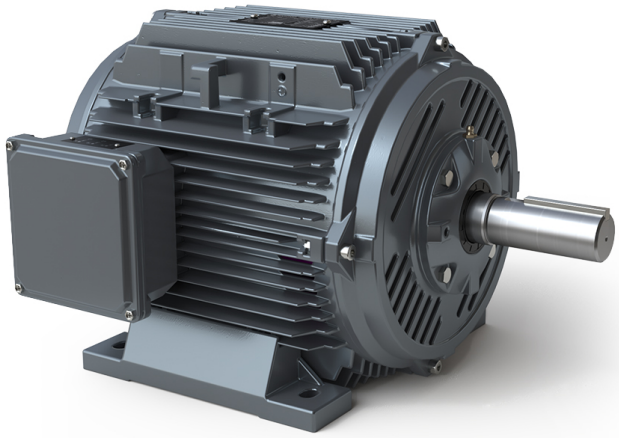

Index

Motor General Data Sheet P 2
Nameplate Information P 3
Technical Performance Data P 4
Motor General Wiring Diagram P 5
Motor General Outline Drawing P 6

NEMA

Model DPA0202D
MFG PN: TDA 254T20U2B

ELECTRICAL DATA		
Rated Motor Output Power	20	HP
	15	kW
Rated Motor Speed	3540	r/min 60Hz
	2945	r/min 50Hz
Rated Motor Voltage (+/-10%)	230/460	V/60Hz
	-	V/50Hz
Rated Motor Current	45.73/22.87	A (I_n) @ 60Hz
	55.3/27.65	A (I_n) @ 50Hz
Phase	3	Ø
Locked Rotor Current @ High Voltage	188.8	A (I_n) @ 60Hz
FI Current @ 208V	50.57	A (I_n) @ 60Hz
Service Factor	1.25	@ 60Hz
	1	@ 50Hz
KVA Code	J	60Hz
	G	50Hz
Nominal Efficiency	91	% @ 60Hz
Nominal Power Factor	0.92	cosΦ @ 60Hz
Leads (Qty, Size)	12	14
Connection	DD/D	–
Coil Resistance	-	Ω
Start Capacitor	-	µF/V
Run Capacitor	-	µF/V
VFD DUTY (S.F. 1.0)	**RATIO**	**Hz**
Variable Torque	30:1	2 - 60
Constant Torque	15:1	4 - 60
FULL LOAD TEMPERATURE RISE		
Full Load Temperature Rise	42.3	°C @ 60Hz
	-	°C @ 50Hz

GENERAL DATA		
Frame Size	254T	
Enclosure	ODP	
Mounting	Rigid	
Approximate Weight (lbs.)	198 lbs.	
Casing Material / Fan Cover	Cast Aluminum	Steel
Shaft Material	1045	
NEMA Design	B	
Degree of Protection (IP)	23	
Insulation Class / Temp Rise (60Hz)	F	B
Tropicalization	YES	
Duty	Cont. / S1	
Conduit Box Location	F1	
Feet Removable / Double Drilled	YES	NO
Paintwork	7024	
	Graphite Gray	
MECHANICAL DATA		
Bearing DE Side	6309 C3	
Bearing ODE Side	6309 C3	
Grease Type	Mobil Polyrex EM	
Compensation Ring (wavy washer)	NDE	
Moment of Inertia (lb-ft^2)	-	
Sound Pressure @ 3 FT dBA	-	
SITE CONDITIONS		
Ambient Temperature (°C)	40	
Meters Above Sea Level (MASL)	1000	
HAZARDOUS LOCATIONS		
CSA Certified	-	
Temperature Code	-	-

NEMA

Model DPA0202D
MFG PN: TDA 254T20U2B

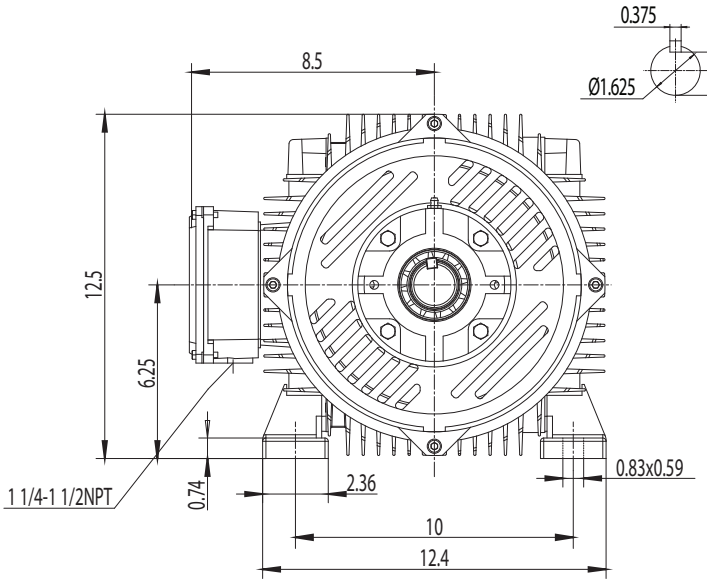

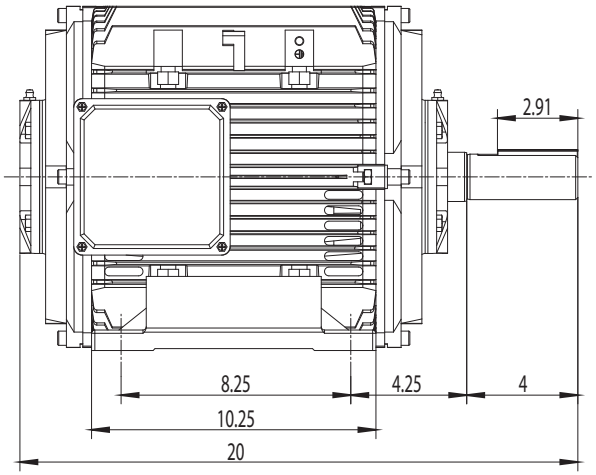

NAMEPLATE DATA	60Hz	50Hz
Horse Power	20	20
RPM	3540	2945
Voltage	230/460	-
Full Load Amps	45.73/22.87	55.3/27.65
Service Factor	1.25	1
KVA Code	J	G
Full Load Amps (208V)	50.57	-
Nominal Efficiency	91	90.1
Nominal Power Factor	0.92	0.91
Design	B	
Frame	254T	
Enclosure Type	ODP	
IP Rating	23	
Duty	Cont. / S1	
Insulation Class	F	
Ambient Rating	40	
Drive End Bearing	6309 C3	
Opposite Drive End Bearing	6309 C3	
Weight (lbs)	198	

NAMEPLATE LAYOUT

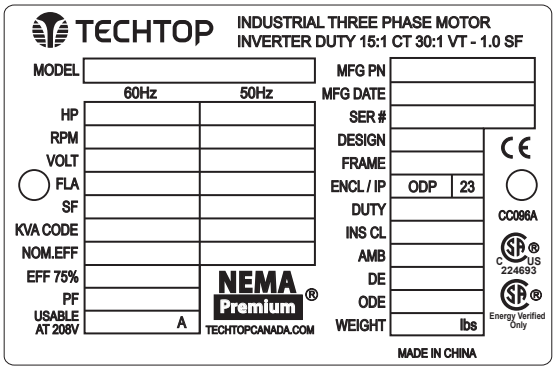

VFD DUTY (S.F. 1.0)	RATIO	Hz*
Variable Torque	30:1	2 - 60
Constant Torque	15:1	4 - 60

*For max speed please contact Techtop Canada

HAZARDOUS LOCATIONS	-
Class / Division	-
Groups	-

Questions? **Call 1.888.286.1820**

NEMA

Model DPA0202D
MFG PN: TDA 254T20U2B

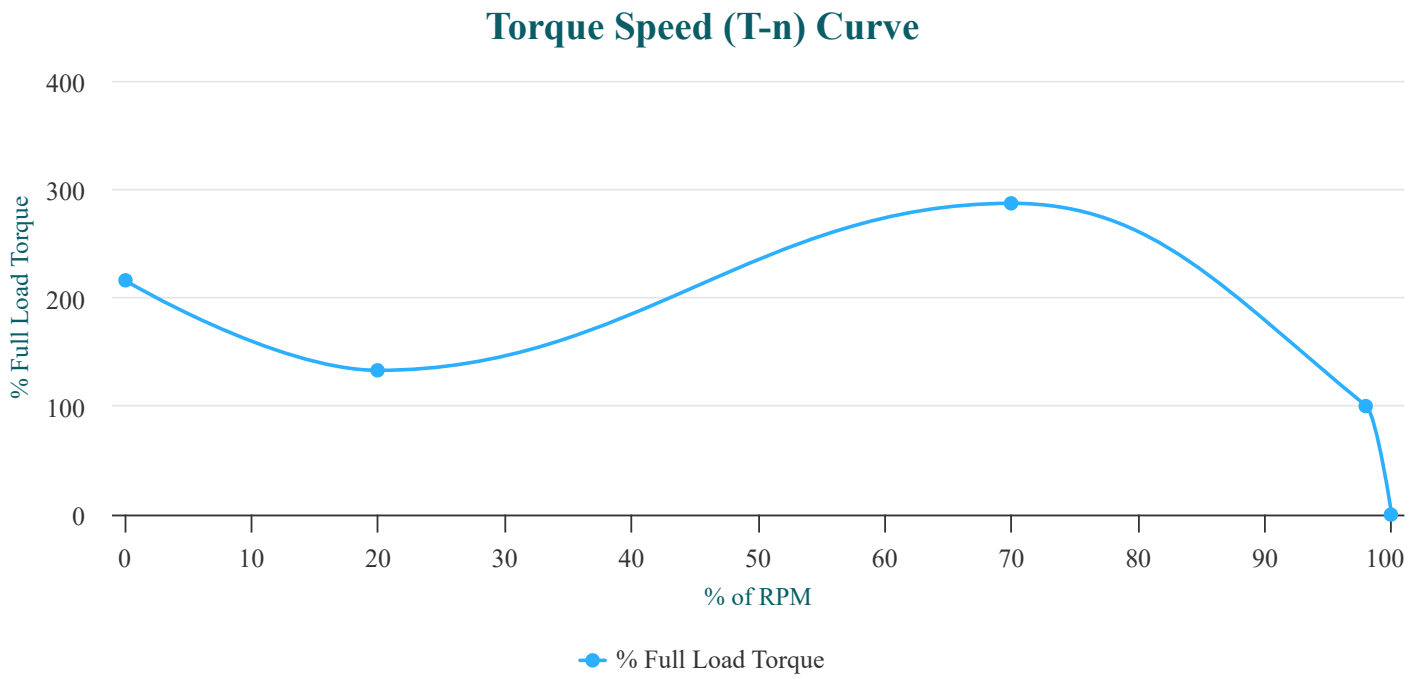

PERFORMANCE LOAD VALUES, HIGH VOLTAGE, 60Hz

TORQUE VALUES	TORQUE (lb-ft)	TORQUE (% FULL LOAD)
Locked Rotor Torque	29.7	216
Pull-Up Torque	39.5	133
Breakdown Torque	85.2	287
Full Load Torque	64.1	100

TYPICAL PERFORMANCE - NOT GUARANTEED VALUES

PERFORMANCE VALUES	
Start Configuration	DOL
Starting Current (A)	188.8
No-Load Current (A)	6.8
No-Load Power Factor	-

% OF RATED LOAD	25	50	75	100	125	S.F. 1.25
Line Amperes (A)	8.9	13	17.7	23	28.8	28.8
Efficiency (%)	85.2	90.2	91.1	90.9	90.1	90.1
Speed (r/min)	3589	3579	3567	3554	3540	3540
Power Factor (cosΦ)	0.62	0.81	0.88	0.9	0.91	0.91
Input Power (kW)	4.4	8.32	12.34	16.5	20.82	20.82

NEMA

Model DPA0202D

MFG PN: TDA 254T20U2B

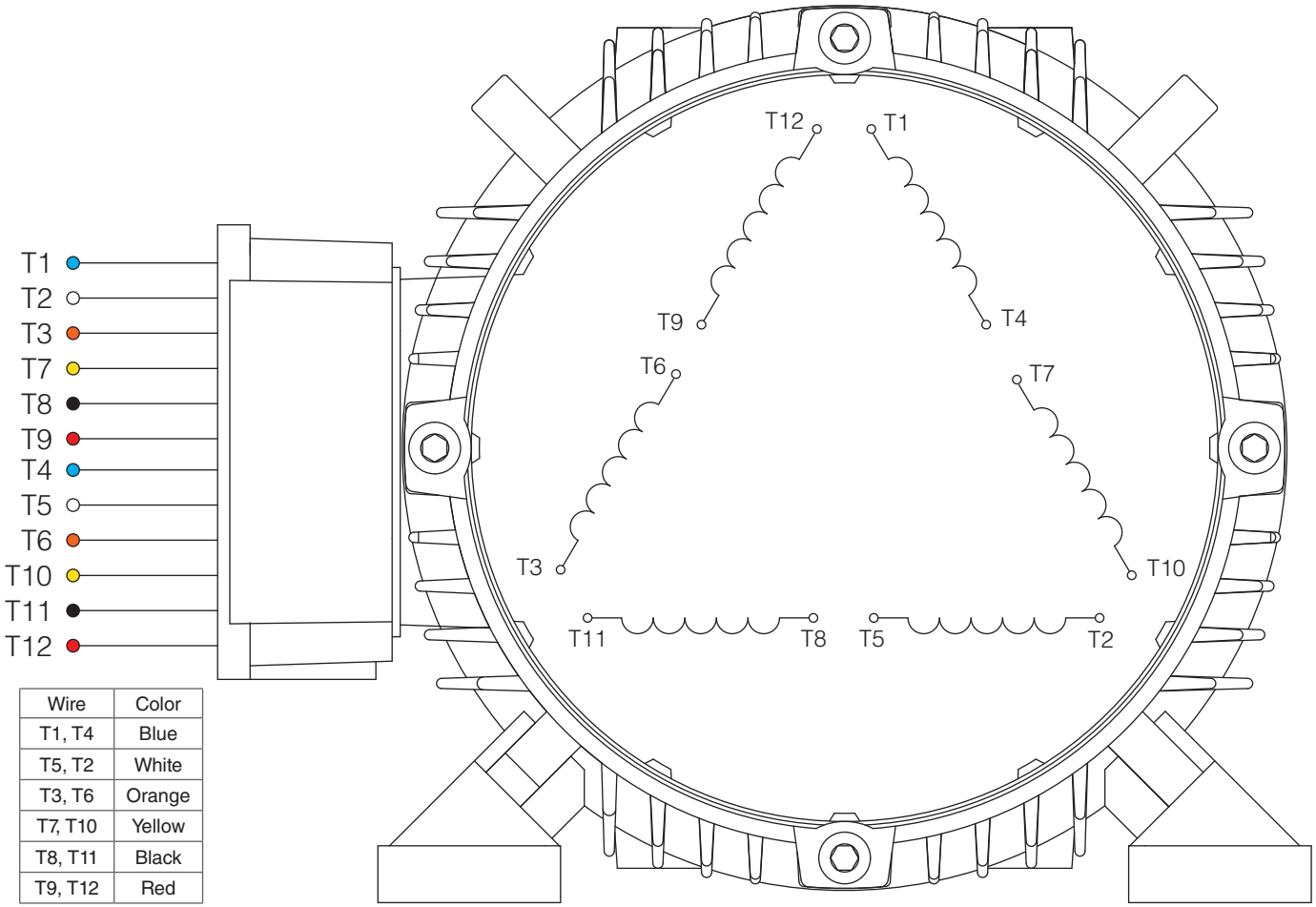

Wire	Color
T1, T4	Blue
T5, T2	White
T3, T6	Orange
T7, T10	Yellow
T8, T11	Black
T9, T12	Red

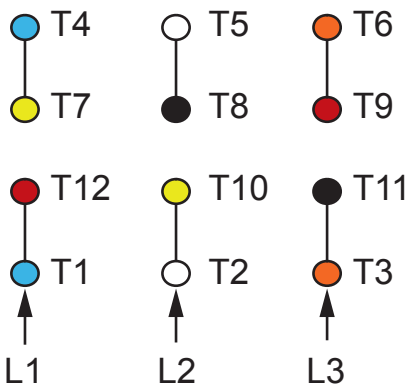

HIGH VOLTAGE
(Δ)

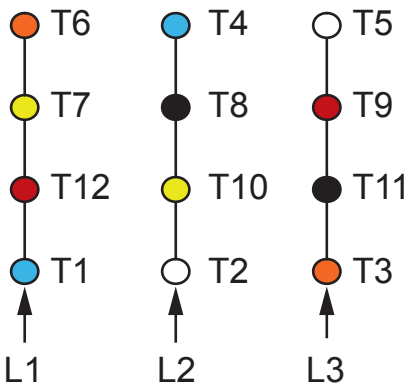

LOW VOLTAGE
(ΔΔ)

NOTES:

1. CCW ROTATION FACING ODE FOR CONNECTIONS SHOWN
2. TO REVERSE ROTATION, SWAP ANY TWO INPUT LINES
3. WHEN MOTOR IS IN F1 POSITION, LEADS INDICATED WITH "*" EXIT THE CASING ABOVE THE CENTER LINE OF THE MOTOR, THE REMAINING LEADS EXIT BELOW THE CENTER LINE
4. LEADS MUST BE NUMBERED AND COLORED AS SHOWN
5. DIAGRAMS FOR REFERENCE ONLY

TECHTOP
You can't top a Techtop.

NEMA 3Ø DD/D 12-Lead Dual Voltage

DRAWING NUMBER:	NEMA-3-12-DD-D
CONNECTION:	DD/D
NUMBER OF LEADS:	12
THERMAL PROTECTION:	-

ISSUED DATE	20/06/25

PREMIUM T-FRAME ALUMINUM & CAST IRON MOTORS, ODP

NEMA

Model DPA0202D

MFG PN: TDA 254T20U2B

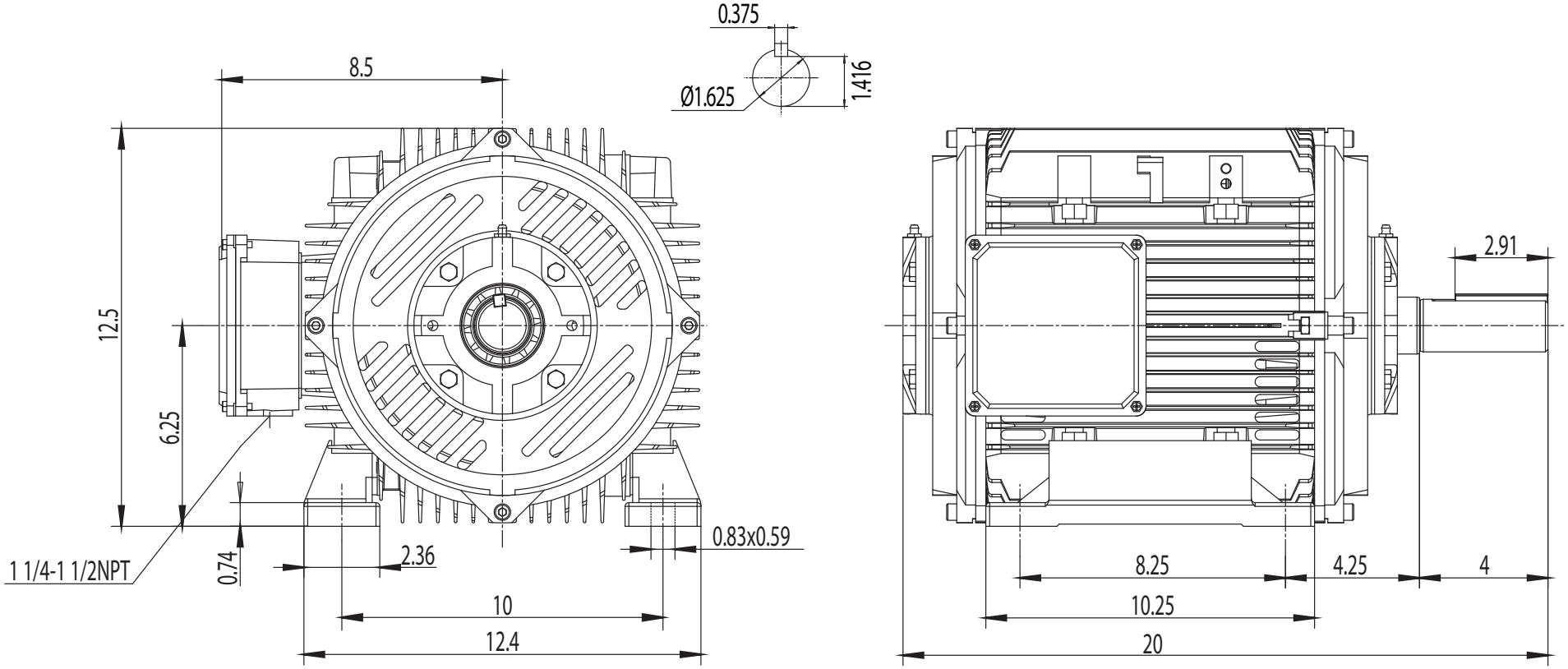

TECHTOP
You can't top a Techtop.

NEMA Premium ODP 254T

DRAWING NUMBER:	GR3-AL-DP-254T	**ISSUED DATE**	20/06/25
DIMENSIONS:	Inches		
MOUNTING:	Rigid	PREMIUM T-FRAME ALUMINUM & CAST IRON MOTORS, ODP	
CASING MATERIAL:	Cast Aluminum		