TECHTOP

NEMA | **Model GRC1004D-TC**
MFG PN: T405T100U4B

Model **GRC1004D-TC**

Product Data Package

MODEL	HP	RPM	VOLTAGE	PHASE	Hz	FRAME	MOUNT	ENCLOSURE
GRC1004D-TC	100	1780	230/460	3	60	405TC	Rigid/C-Flange	TEFC

Toronto

TOLL FREE 1.888.286.1820
PHONE 905.829.1001
EMAIL info@techtopcanada.com

Montreal

TOLL FREE 1.844.354.5111
PHONE 514.354.1002
EMAIL infoQC@techtopcanada.com

Moncton

PHONE 506.386.5794
EMAIL infoNB@techtopcanada.com

Winnipeg

PHONE 204.633.2779
EMAIL infoMB@techtopcanada.com

Vancouver

PHONE 604.525.1551
EMAIL infoBC@techtopcanada.com

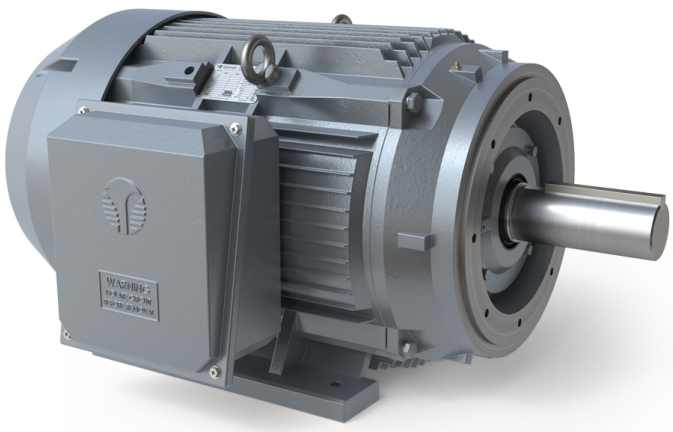

Index

Motor General Data Sheet P 2
Nameplate Information P 3
Technical Performance Data P 4
Motor General Wiring Diagram P 5
Motor General Outline Drawing P 6

NEMA

Model GRC1004D-TC

MFG PN: T405T100U4B

ELECTRICAL DATA		
Rated Motor Output Power	100	HP
	-	kW
Rated Motor Speed	1780	r/min 60Hz
	1475	r/min 50Hz
Rated Motor Voltage (+/-10%)	230/460	V/60Hz
	190/380	V/50Hz
Rated Motor Current	228/114	A (I_n) @ 60Hz
	274/137	A (I_n) @ 50Hz
Phase	3	Ø
Locked Rotor Current @ High Voltage	1130	A (I_n) @ 60Hz
FI Current @ 208V	-	A (I_n) @ 60Hz
Service Factor	1.15	@ 60Hz
	1	@ 50Hz
KVA Code	L	60Hz
	H	50Hz
Nominal Efficiency	95.4	% @ 60Hz
Nominal Power Factor	0.86	cosΦ @ 60Hz
Leads (Qty, Size)	12	6
Connection	DD/D	–
Coil Resistance	0.043	Ω
Start Capacitor	-	µF/V
Run Capacitor	-	µF/V
VFD DUTY (S.F. 1.0)	**RATIO**	**Hz**
Variable Torque	30:1	2 - 60
Constant Torque	15:1	4 - 60
FULL LOAD TEMPERATURE RISE		
Full Load Temperature Rise	70.3	°C @ 60Hz
	100.2	°C @ 50Hz

GENERAL DATA		
Frame Size	405TC	
Enclosure	TEFC	
Mounting	Rigid/C-Flange	
Approximate Weight (lbs.)	1063.8 lbs.	
Casing Material / Fan Cover	Cast Iron	Cast Iron
Shaft Material	-	
NEMA Design	A	
Degree of Protection (IP)	55	
Insulation Class / Temp Rise (60Hz)	F	B
Tropicalization	YES	
Duty	Cont. / S1	
Conduit Box Location	F1	
Feet Removable / Double Drilled	NO	YES
Paintwork	7024	
	Graphite Gray	
MECHANICAL DATA		
Bearing DE Side	6316 C3	
Bearing ODE Side	6314 C3	
Grease Type	Mobil Polyrex EM	
Compensation Ring (wavy washer)	NDE	
Moment of Inertia (lb-ft^2)	20.87	
Sound Pressure @ 3 FT dBA	88.5	
SITE CONDITIONS		
Ambient Temperature (°C)	40	
Meters Above Sea Level (MASL)	1000	
HAZARDOUS LOCATIONS		
CSA Certified	A, B, C & D	
Temperature Code	T3A	-

NEMA | Model GRC1004D-TC

MFG PN: T405T100U4B

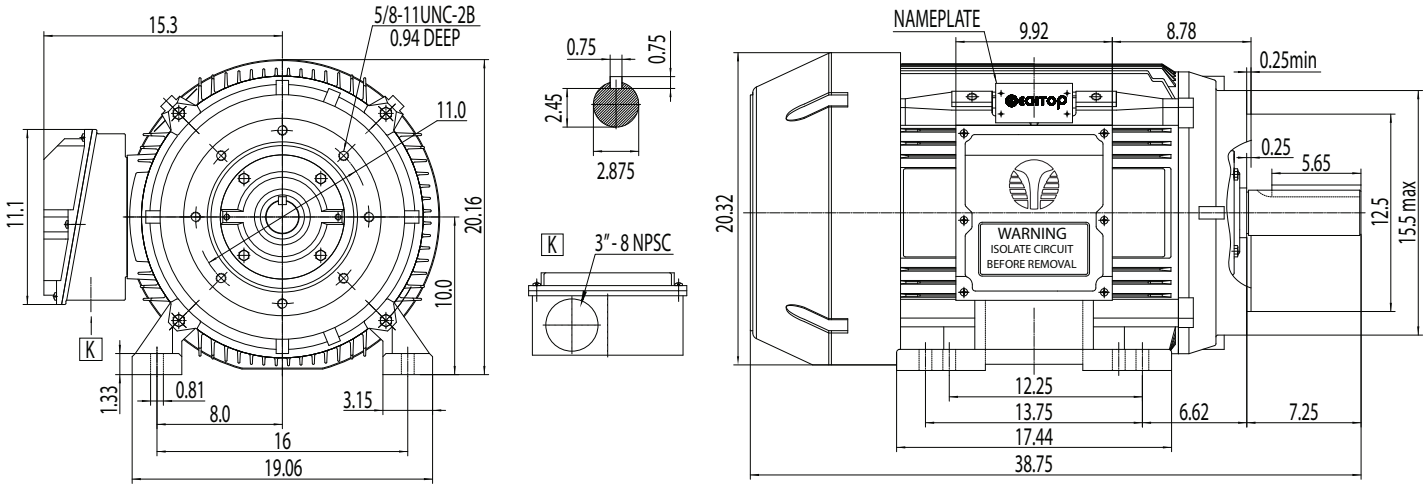

NAMEPLATE DATA	60Hz	50Hz
Horse Power	100	100
RPM	1780	1475
Voltage	230/460	190/380
Full Load Amps	228/114	274/137
Service Factor	1.15	1
KVA Code	L	H
Full Load Amps (208V)	-	-
Nominal Efficiency	95.4	94.1
Nominal Power Factor	0.86	-
Design	A	
Frame	405TC	
Enclosure Type	TEFC	
IP Rating	55	
Duty	Cont. / S1	
Insulation Class	F	
Ambient Rating	40	
Drive End Bearing	6316 C3	
Opposite Drive End Bearing	6314 C3	
Weight (lbs)	1063.8	

NAMEPLATE LAYOUT

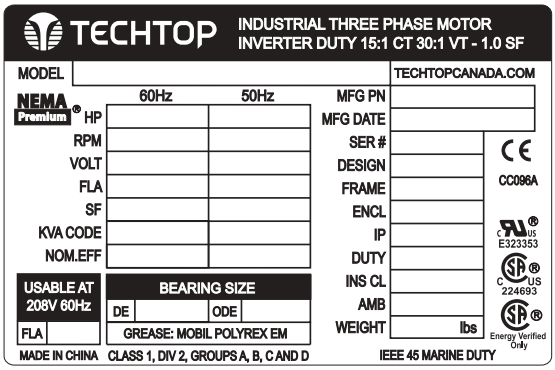

VFD DUTY (S.F. 1.0)	RATIO	Hz*
Variable Torque	30:1	2 - 60
Constant Torque	15:1	4 - 60

*For max speed please contact Techtop Canada

HAZARDOUS LOCATIONS	CSA CERTIFIED
Class / Division	Class I, Div. 2
Groups	A, B, C & D

Questions? **Call 1.888.286.1820**

NEMA

Model GRC1004D-TC

MFG PN: T405T100U4B

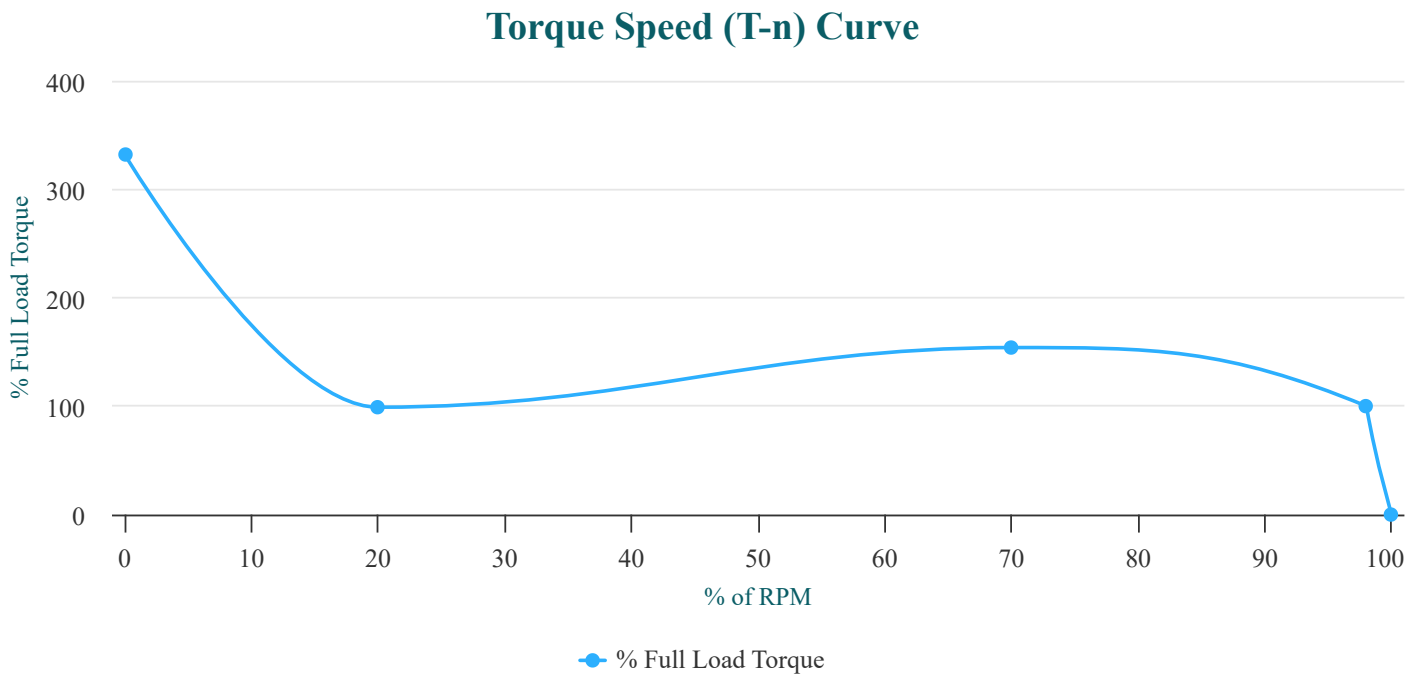

PERFORMANCE LOAD VALUES, HIGH VOLTAGE, 60Hz

TORQUE VALUES	TORQUE (lb-ft)	TORQUE (% FULL LOAD)
Locked Rotor Torque	979.6	332
Pull-Up Torque	292.1	99
Breakdown Torque	454.4	154
Full Load Torque	295.1	100

TYPICAL PERFORMANCE - NOT GUARANTEED VALUES

PERFORMANCE VALUES	
Start Configuration	DOL
Starting Current (A)	1130
No-Load Current (A)	41.2
No-Load Power Factor	0.05

% OF RATED LOAD	25	50	75	100	125	S.F. 1.15
Line Amperes (A)	48.7	65.7	88	113.9	141.4	-
Efficiency (%)	91.8	94.7	95.3	95.1	94.7	-
Speed (r/min)	1796	1792	1788	1783	1778	-
Power Factor (cosΦ)	0.53	0.76	0.84	0.87	0.88	-
Input Power (kW)	20.43	39.58	59.03	78.83	98.97	-

NEMA

Model GRC1004D-TC

MFG PN: T405T100U4B

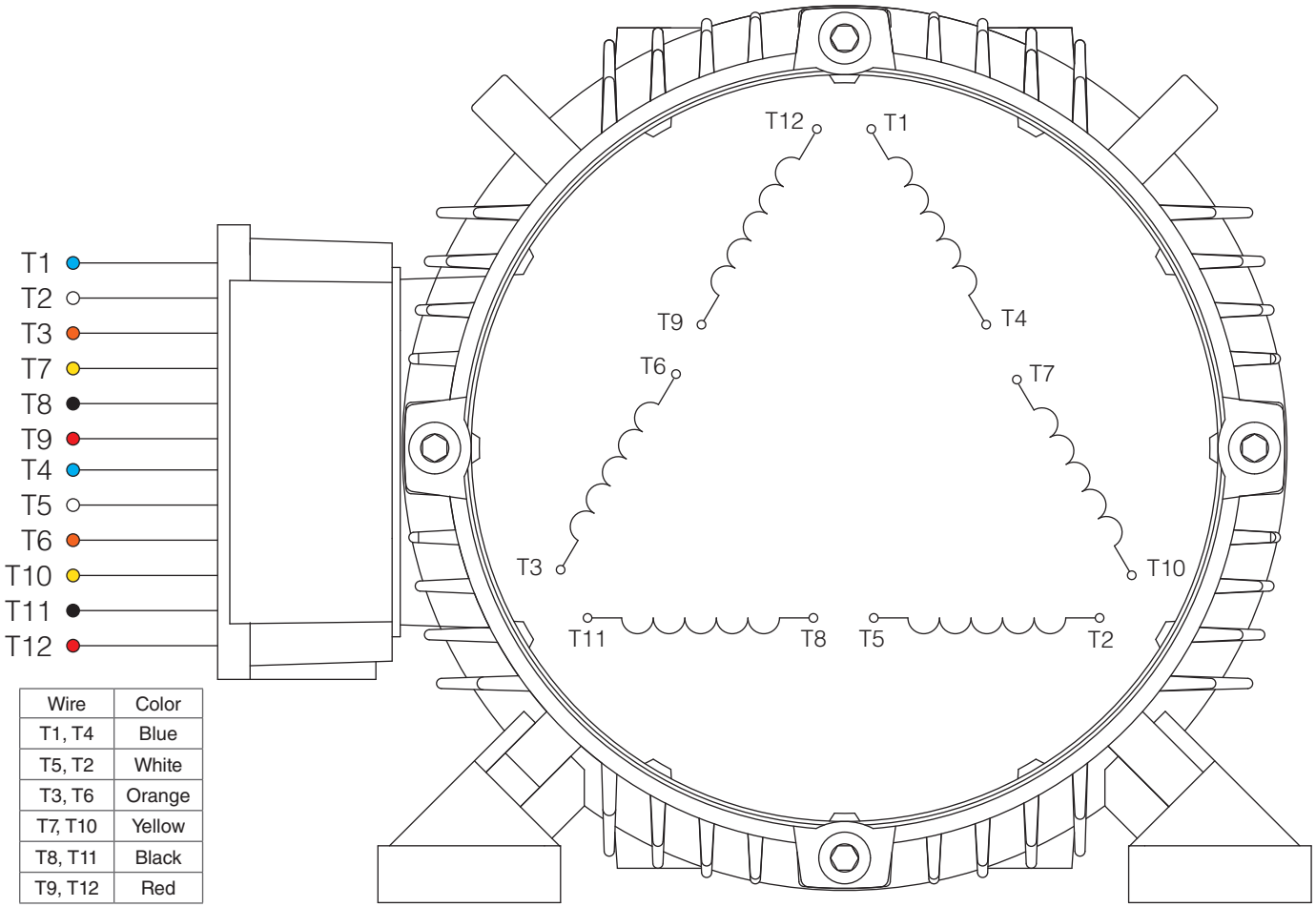

Wire	Color
T1, T4	Blue
T5, T2	White
T3, T6	Orange
T7, T10	Yellow
T8, T11	Black
T9, T12	Red

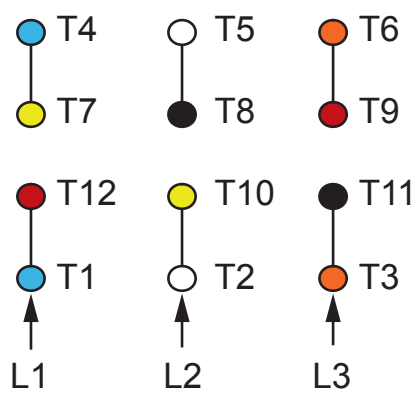

HIGH VOLTAGE
(Δ)

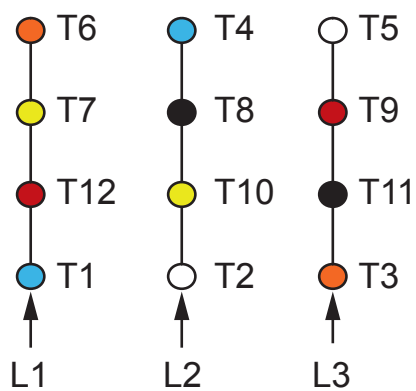

LOW VOLTAGE
(ΔΔ)

NOTES:

1. CCW ROTATION FACING ODE FOR CONNECTIONS SHOWN
2. TO REVERSE ROTATION, SWAP ANY TWO INPUT LINES
3. WHEN MOTOR IS IN F1 POSITION, LEADS INDICATED WITH "*" EXIT THE CASING ABOVE THE CENTER LINE OF THE MOTOR, THE REMAINING LEADS EXIT BELOW THE CENTER LINE
4. LEADS MUST BE NUMBERED AND COLORED AS SHOWN
5. DIAGRAMS FOR REFERENCE ONLY

TECHTOP
You can't top a Techtop.

NEMA 3Ø DD/D 12-Lead Dual Voltage

DRAWING NUMBER:	NEMA-3-12-DD-D
CONNECTION:	DD/D
NUMBER OF LEADS:	12
THERMAL PROTECTION:	-

ISSUED DATE	02/06/25

PREMIUM T-FRAME CAST IRON MOTORS

NEMA

Model GRC1004D-TC

MFG PN: T405T100U4B

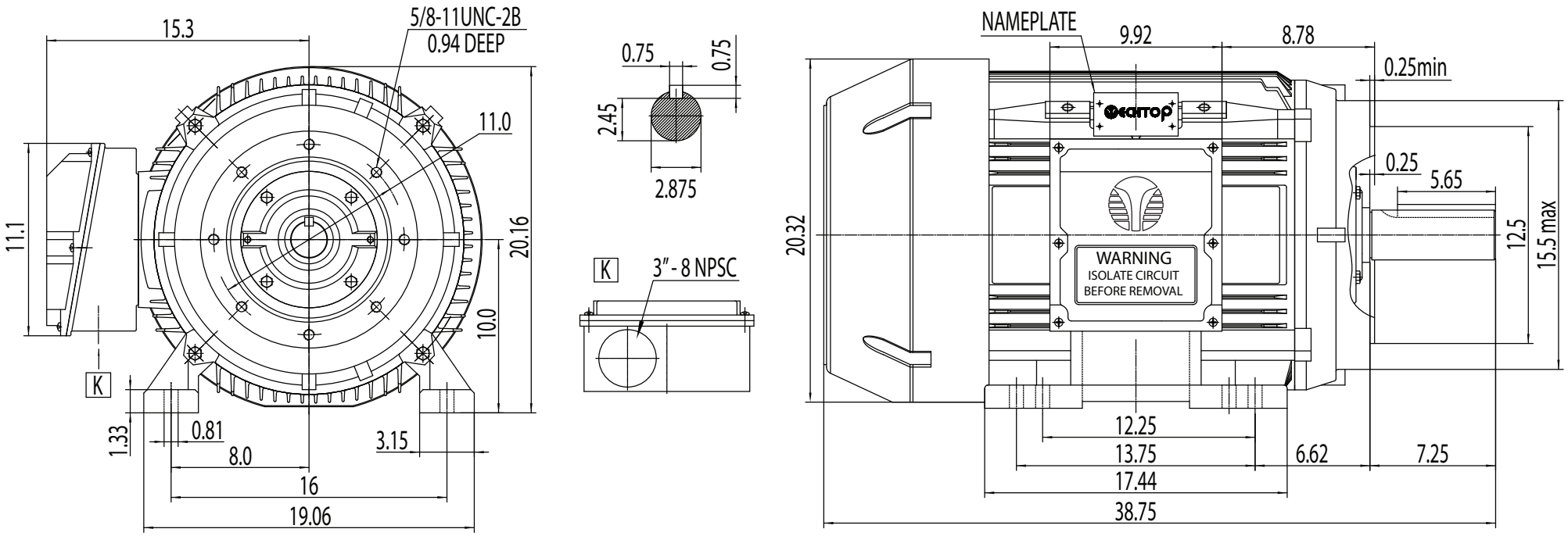

TECHTOP
You can't top a Techtop.

NEMA Premium TEFC 405TC

DRAWING NUMBER:	GR3-CI-TF-404(5)TC-CFC	**ISSUED DATE**	02/06/25
DIMENSIONS:	Inches		
MOUNTING:	Rigid/C-Flange	PREMIUM T-FRAME CAST IRON MOTORS	
CASING MATERIAL:	Cast Iron		