DATA SHEET

Three Phase Induction Motor - Squirrel Cage

Customer :

Product line	: W22 NEMA Premium Efficiency Three-Phase	Product code :	11611342
		Catalog # :	HT010502NPW22

Frame	: 213/5T	Locked rotor time	: 27s (cold) 15s (hot)
Output	: 10 HP (7.5 kW)	Temperature rise	: 80 K
Poles	: 2	Duty cycle	: Cont.(S1)
Frequency	: 60 Hz	Ambient temperature	: -20°C to +40°C
Rated voltage	: 575 V	Altitude	: 1000 m.a.s.l.
Rated current	: 9.28 A	Protection degree	: IP55
L. R. Amperes	: 66.8 A	Cooling method	: IC411 - TEFC
LRC	: 7.2x(Code H)	Mounting	: F-1
No load current	: 2.80 A	Rotation¹	: Both (CW and CCW)
Rated speed	: 3530 rpm	Noise level²	: 68.0 dB(A)
Slip	: 1.94 %	Starting method	: Direct On Line
Rated torque	: 14.9 ft.lb	Approx. weight³	: 163 lb
Locked rotor torque	: 220 %		
Breakdown torque	: 290 %		
Insulation class	: F		
Service factor	: 1.25		
Moment of inertia (J)	: 0.6362 sq.ft.lb		
Design	: B		

Output	50%	75%	100%
Efficiency (%)	89.5	90.2	90.2
Power Factor	0.79	0.87	0.90

Foundation loads	
Max. traction	: 160 lb
Max. compression	: 326 lb

Losses at normative operating points (speed;torque), in percentage of rated output power

P1 (0,9;1,0)	P2 (0,5;1,0)	P3 (0,25;1,0)	P4 (0,9;0,5)	P5 (0,5;0,5)	P6 (0,5;0,25)	P7 (0,25;0,25)
10.6	8.9	8.2	5.1	3.3	2.0	1.3

		Drive end	Non drive end
Bearing type	:	6308 ZZ	6207 ZZ
Sealing	:	V'Ring	V'Ring
Lubrication interval	:	-	-
Lubricant amount	:	-	-
Lubricant type	:	00088	

Notes

This revision replaces and cancel the previous one, which must be eliminated.
(1) Looking the motor from the shaft end.
(2) Measured at 1m and with tolerance of +3dB(A).
(3) Approximate weight subject to changes after manufacturing process.
(4) At 100% of full load.

These are average values based on tests with sinusoidal power supply, subject to the tolerances stipulated in NEMA MG-1.

Rev.	Changes Summary	Performed	Checked	Date

Performed by				
Checked by			Page	Revision
Date	27/07/2026		1 / 6	

This document is exclusive property of WEG S/A. Reprinting is not allowed without written authorization of WEG S/A.
Subject to change without notice

TORQUE AND CURRENT VS SPEED CURVE

Three Phase Induction Motor - Squirrel Cage

Customer	:		
Product line	: W22 NEMA Premium Efficiency Three-Phase	Product code :	11611342
		Catalog # :	HT010502NPW22

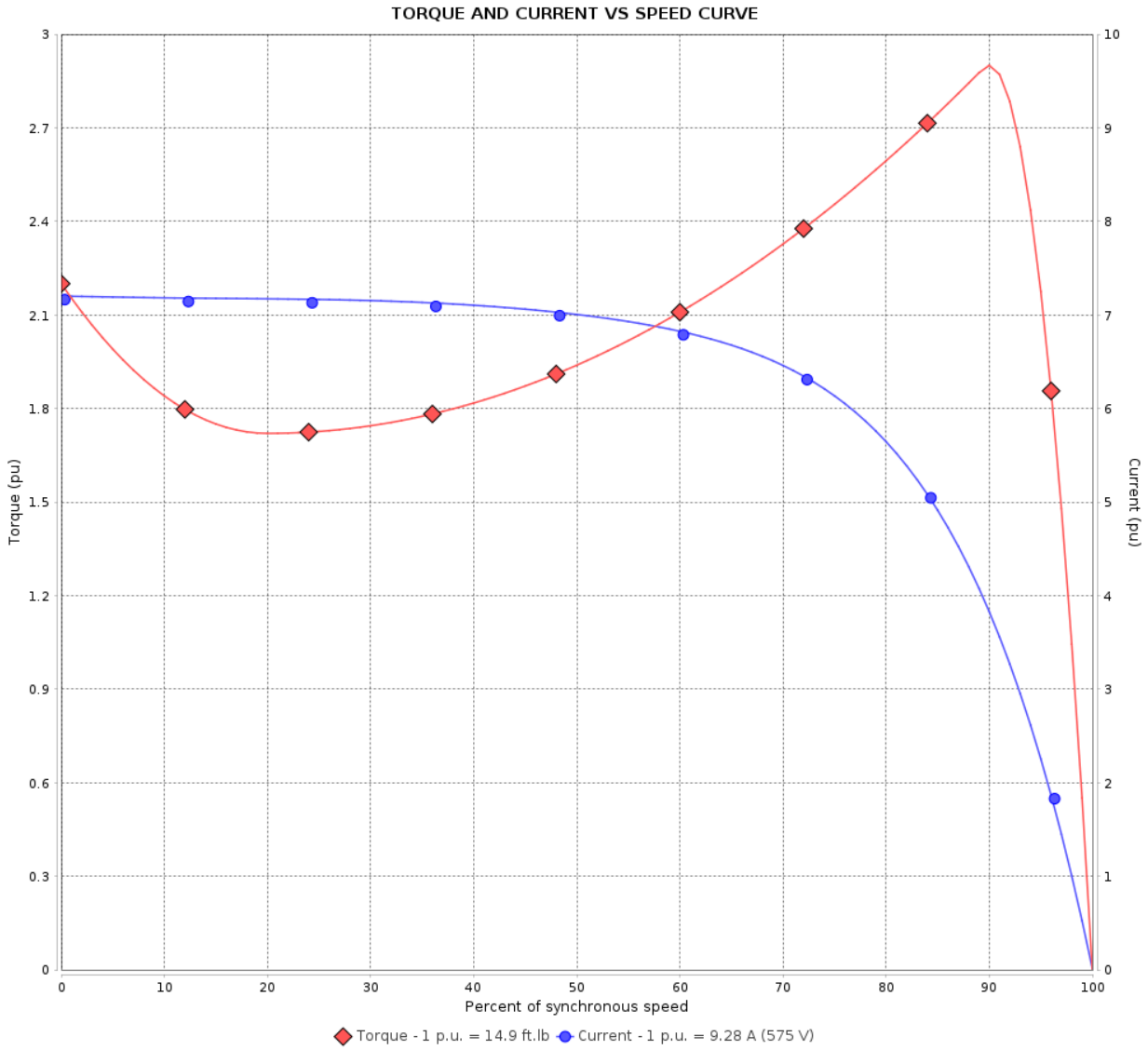

Performance	: 575 V 60 Hz 2P		
Rated current	: 9.28 A	Moment of inertia (J)	: 0.6362 sq.ft.lb
LRC	: 7.2	Duty cycle	: Cont.(S1)
Rated torque	: 14.9 ft.lb	Insulation class	: F
Locked rotor torque	: 220 %	Service factor	: 1.25
Breakdown torque	: 290 %	Temperature rise	: 80 K
Rated speed	: 3530 rpm	Design	: B
Locked rotor time	: 27s (cold) 15s (hot)		

Rev.	Changes Summary	Performed	Checked	Date

Performed by				
Checked by			Page	Revision
Date	27/07/2026		2 / 6	

This document is exclusive property of WEG S/A. Reprinting is not allowed without written authorization of WEG S/A.
Subject to change without notice

LOAD PERFORMANCE CURVE

Three Phase Induction Motor - Squirrel Cage

Customer :

Product line	: W22 NEMA Premium Efficiency Three-Phase	Product code :	11611342
		Catalog # :	HT010502NPW22

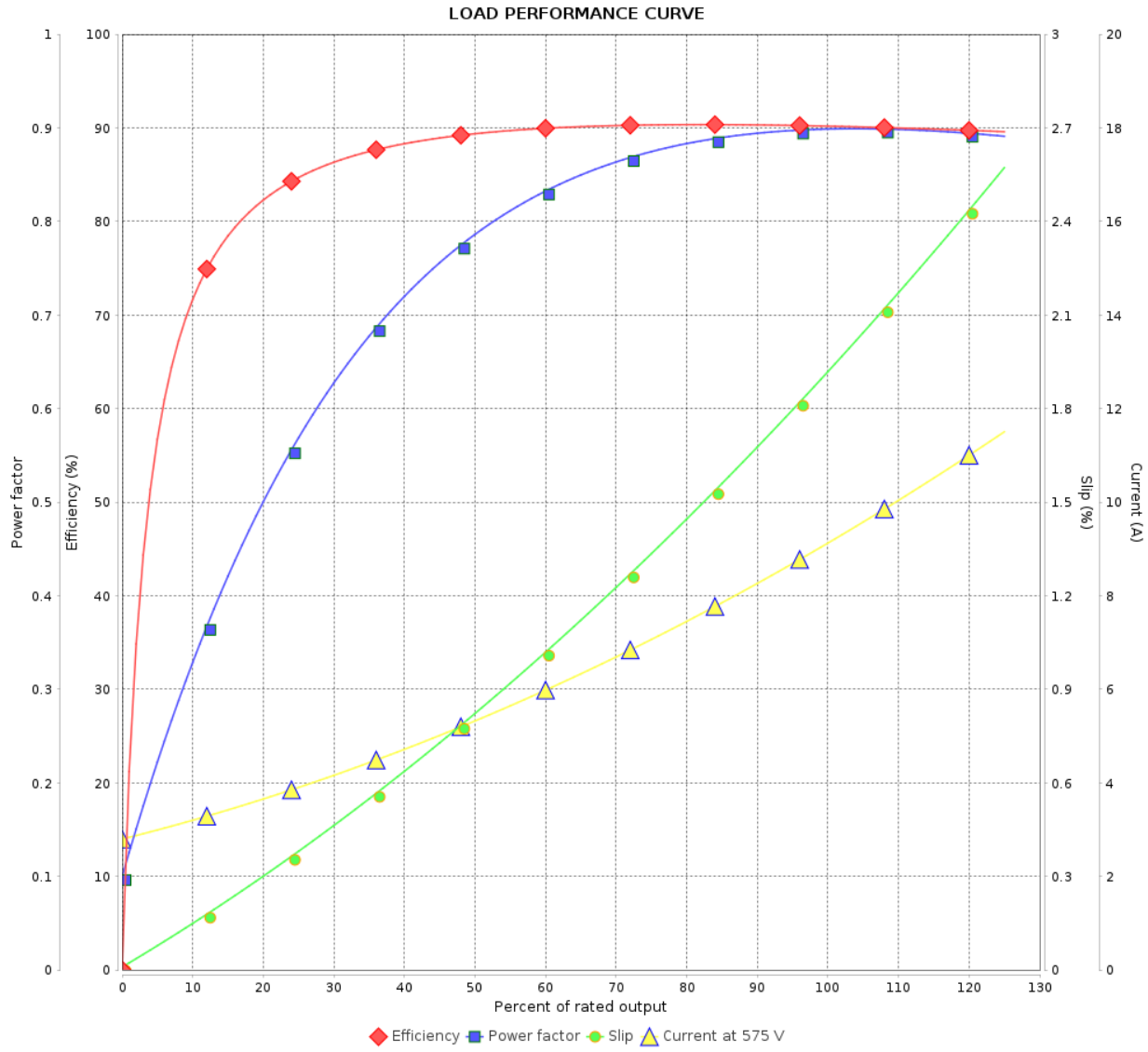

Performance	: 575 V 60 Hz 2P

Rated current	: 9.28 A	Moment of inertia (J)	: 0.6362 sq.ft.lb
LRC	: 7.2	Duty cycle	: Cont.(S1)
Rated torque	: 14.9 ft.lb	Insulation class	: F
Locked rotor torque	: 220 %	Service factor	: 1.25
Breakdown torque	: 290 %	Temperature rise	: 80 K
Rated speed	: 3530 rpm	Design	: B

Rev.	Changes Summary	Performed	Checked	Date

Performed by				
Checked by			Page	Revision
Date	27/07/2026		3 / 6	

This document is exclusive property of WEG S/A. Reprinting is not allowed without written authorization of WEG S/A.
Subject to change without notice

THERMAL LIMIT CURVE

Three Phase Induction Motor - Squirrel Cage

Customer :

Product line	: W22 NEMA Premium Efficiency Three-Phase	Product code :	11611342
		Catalog # :	HT010502NPW22

Performance : 575 V 60 Hz 2P

Rated current	: 9.28 A	Moment of inertia (J)	: 0.6362 sq.ft.lb
LRC	: 7.2	Duty cycle	: Cont.(S1)
Rated torque	: 14.9 ft.lb	Insulation class	: F
Locked rotor torque	: 220 %	Service factor	: 1.25
Breakdown torque	: 290 %	Temperature rise	: 80 K
Rated speed	: 3530 rpm	Design	: B

Heating constant

Cooling constant

Rev.	Changes Summary	Performed	Checked	Date

Performed by				
Checked by			Page	Revision
Date	27/07/2026		4 / 6	

This document is exclusive property of WEG S/A. Reprinting is not allowed without written authorization of WEG S/A.
Subject to change without notice

THERMAL LIMIT CURVE

Three Phase Induction Motor - Squirrel Cage

Customer :

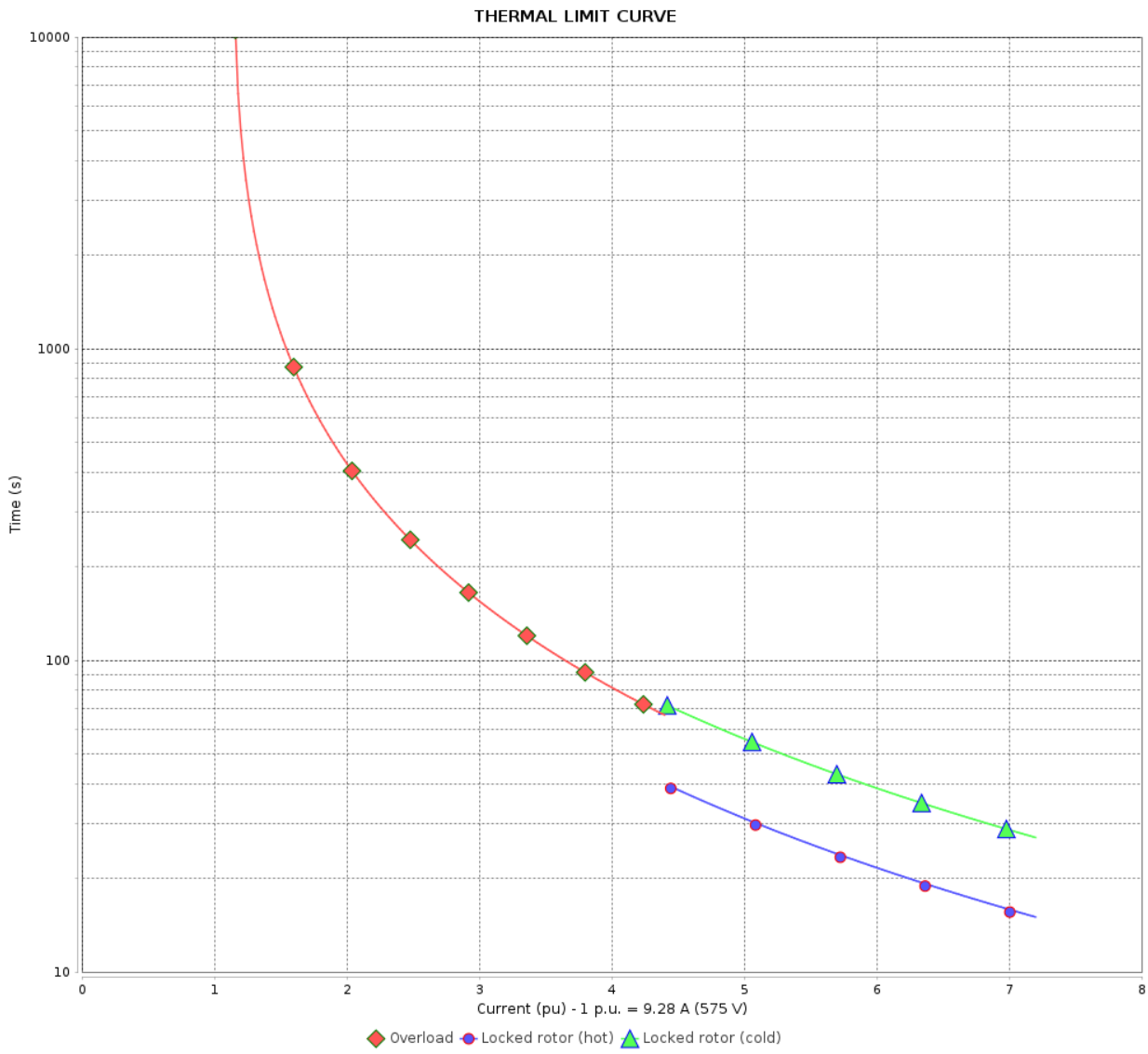

Rev.	Changes Summary	Performed	Checked	Date

Performed by				
Checked by			Page	Revision
Date	27/07/2026		5 / 6	

This document is exclusive property of WEG S/A. Reprinting is not allowed without written authorization of WEG S/A.
Subject to change without notice

VFD OPERATION CURVE

Three Phase Induction Motor - Squirrel Cage

Customer :

Product line	: W22 NEMA Premium Efficiency Three-Phase	Product code :	11611342
		Catalog # :	HT010502NPW22

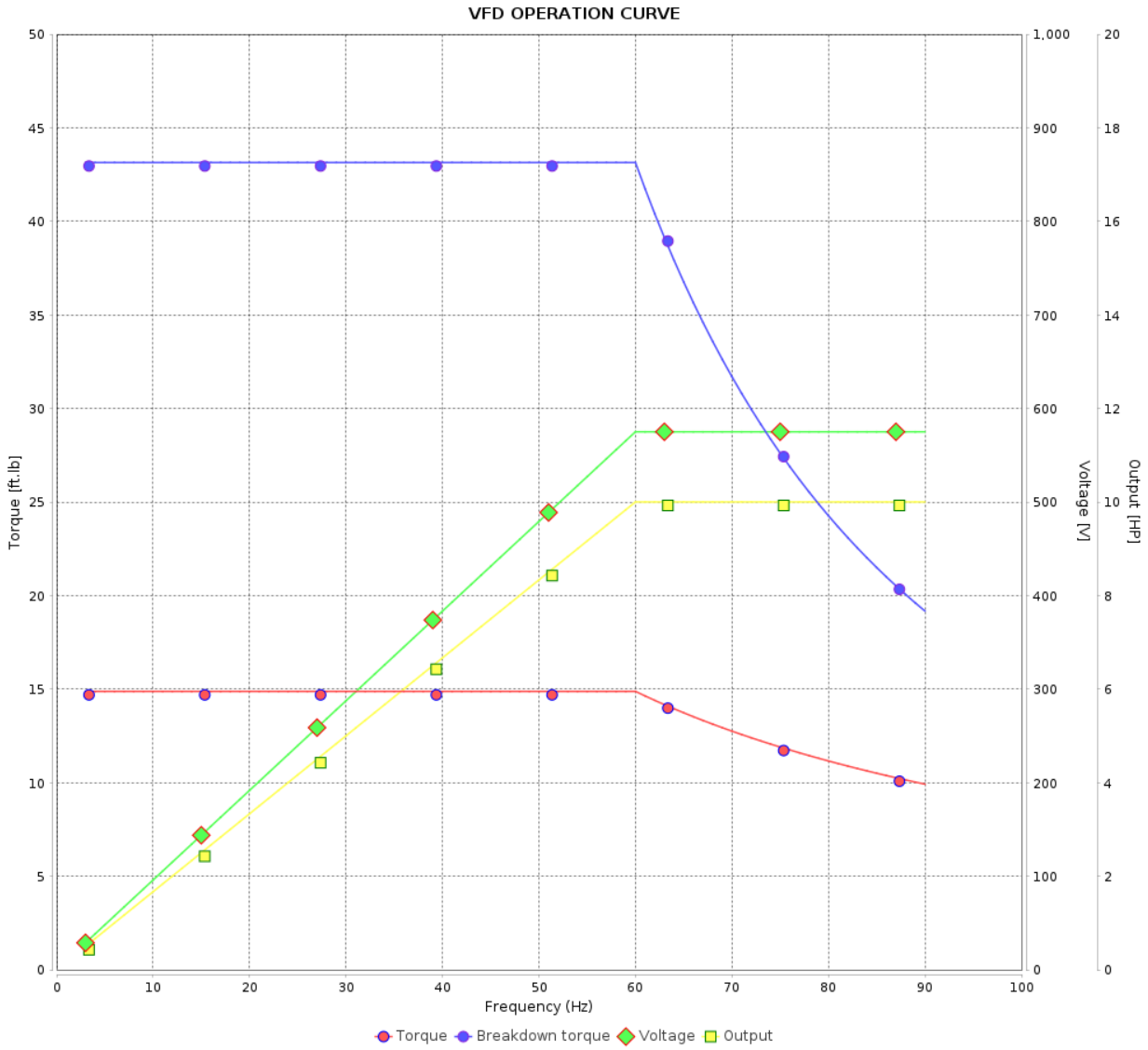

Performance	: 575 V 60 Hz 2P

Rated current	: 9.28 A	Moment of inertia (J)	: 0.6362 sq.ft.lb
LRC	: 7.2	Duty cycle	: Cont.(S1)
Rated torque	: 14.9 ft.lb	Insulation class	: F
Locked rotor torque	: 220 %	Service factor	: 1.25
Breakdown torque	: 290 %	Temperature rise	: 80 K
Rated speed	: 3530 rpm	Design	: B

Rev.	Changes Summary	Performed	Checked	Date

Performed by				
Checked by			Page	Revision
Date	27/07/2026		6 / 6	

This document is exclusive property of WEG S/A. Reprinting is not allowed without written authorization of WEG S/A.
Subject to change without notice

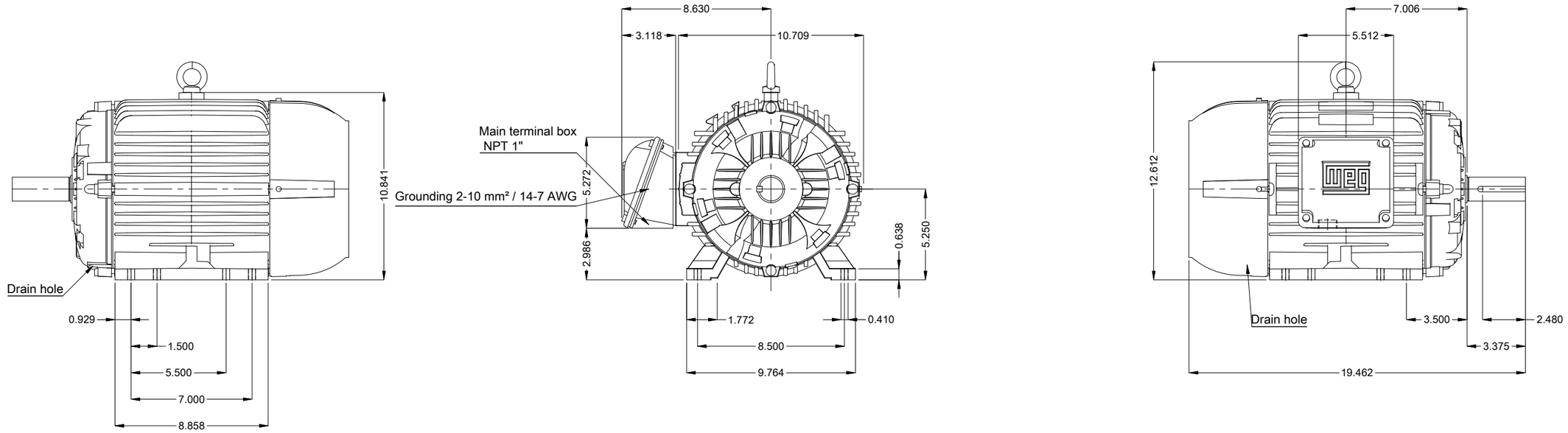

DE Shaft End

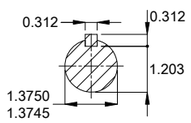

Color RAL 5009

Painting plan 207A

Mounting B3R(D)

10 HP 02 Poles 60 Hz | A

Scale 2 : 13

ECM	LOC	SUMMARY OF MODIFICATIONS	EXECUTED	CHECKED	RELEASED	DATE	VER
			HYBRISUSER				00

EXECUTED	HYBRISUSER
CHECKED	
RELEASED	
REL. DATE	

THREE PH. MOTOR W22 NEMA PREM. EFF.
FRAME 213/5T IP55 TEFC

PREVIEW

WDD 00

SHEET 1 / 1

Dimensions in inches

A3

WEG's property. Forbidden reproduction without previous authorization.