DATA SHEET

Three Phase Induction Motor - Squirrel Cage

Customer :

Product line	: W22 NEMA Premium Efficiency Three-Phase	Product code :	11403782
		Catalog # :	HT060506NPBBW22

Frame	: 404/5T	Locked rotor time	: 36s (cold) 20s (hot)
Output	: 60 HP (45 kW)	Temperature rise	: 80 K
Poles	: 6	Duty cycle	: Cont.(S1)
Frequency	: 60 Hz	Ambient temperature	: -20°C to +40°C
Rated voltage	: 575 V	Altitude	: 1000 m.a.s.l.
Rated current	: 55.6 A	Protection degree	: IP55
L. R. Amperes	: 395 A	Cooling method	: IC411 - TEFC
LRC	: 7.1x(Code H)	Mounting	: F-1
No load current	: 20.0 A	Rotation¹	: Both (CW and CCW)
Rated speed	: 1185 rpm	Noise level²	: 68.0 dB(A)
Slip	: 1.25 %	Starting method	: Direct On Line
Rated torque	: 266 ft.lb	Approx. weight³	: 1036 lb
Locked rotor torque	: 200 %		
Breakdown torque	: 229 %		
Insulation class	: F		
Service factor	: 1.25		
Moment of inertia (J)	: 36.9 sq.ft.lb		
Design	: B		

Output	50%	75%	100%
Efficiency (%)	94.1	94.5	94.5
Power Factor	0.74	0.82	0.86

Foundation loads	
Max. traction	: 1276 lb
Max. compression	: 2395 lb

Losses at normative operating points (speed;torque), in percentage of rated output power

P1 (0,9;1,0)	P2 (0,5;1,0)	P3 (0,25;1,0)	P4 (0,9;0,5)	P5 (0,5;0,5)	P6 (0,5;0,25)	P7 (0,25;0,25)
5.6	4.6	4.3	2.6	1.8	1.1	0.7

		Drive end	Non drive end
Bearing type	:	6316 C3	6314 C3
Sealing	:	WSeal	WSeal
Lubrication interval	:	16000 h	17000 h
Lubricant amount	:	34 g	27 g
Lubricant type	:	Mobil Polyrex EM	

Notes

This revision replaces and cancel the previous one, which must be eliminated.
(1) Looking the motor from the shaft end.
(2) Measured at 1m and with tolerance of +3dB(A).
(3) Approximate weight subject to changes after manufacturing process.
(4) At 100% of full load.

These are average values based on tests with sinusoidal power supply, subject to the tolerances stipulated in NEMA MG-1.

Rev.	Changes Summary	Performed	Checked	Date

Performed by				
Checked by			Page	Revision
Date	02/07/2026		1 / 6	

This document is exclusive property of WEG S/A. Reprinting is not allowed without written authorization of WEG S/A.
Subject to change without notice

TORQUE AND CURRENT VS SPEED CURVE

Three Phase Induction Motor - Squirrel Cage

Customer	:		
Product line	: W22 NEMA Premium Efficiency Three-Phase	Product code :	11403782
		Catalog # :	HT060506NPBBW22

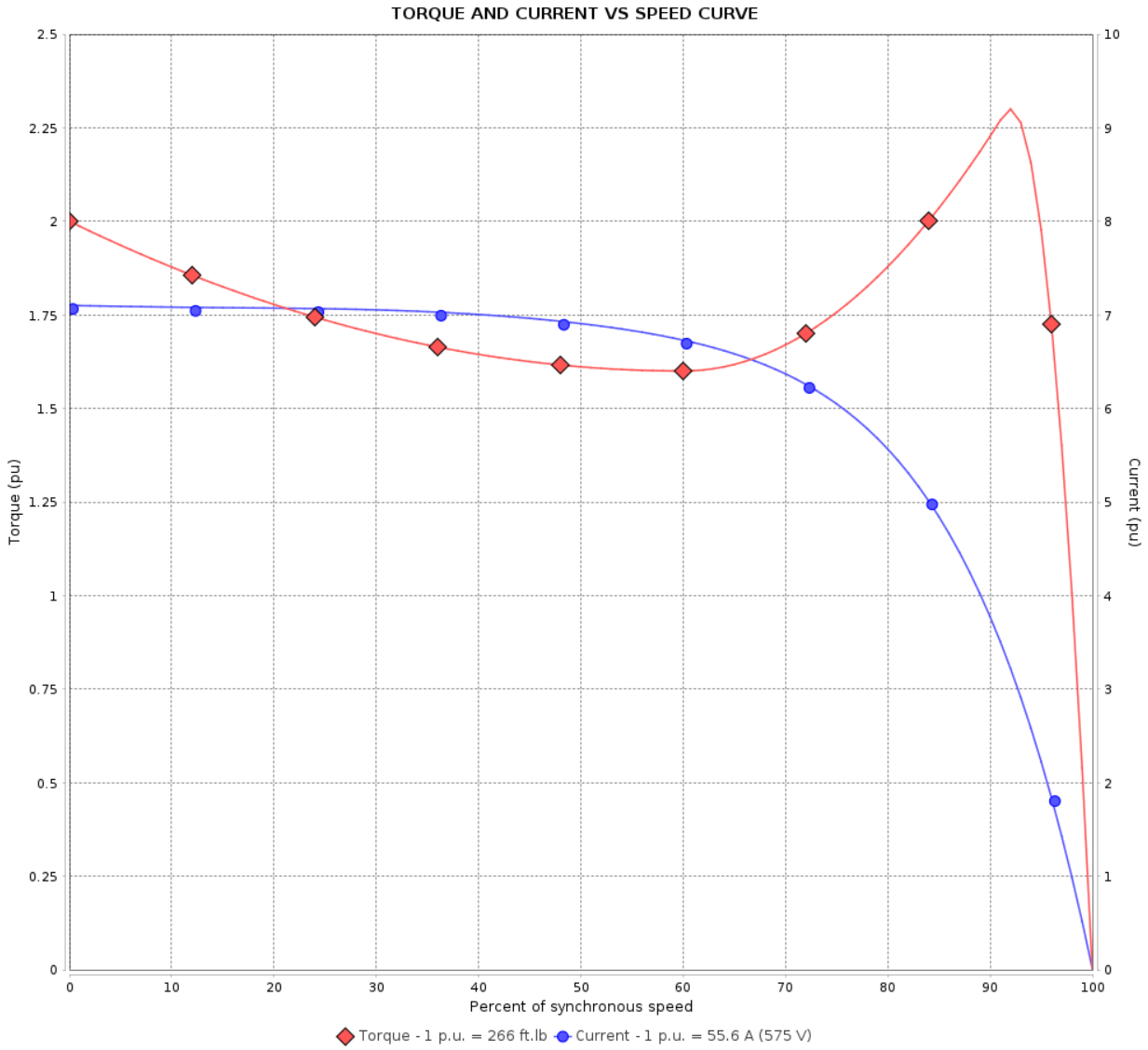

Performance	: 575 V 60 Hz 6P		
Rated current	: 55.6 A	Moment of inertia (J)	: 36.9 sq.ft.lb
LRC	: 7.1	Duty cycle	: Cont.(S1)
Rated torque	: 266 ft.lb	Insulation class	: F
Locked rotor torque	: 200 %	Service factor	: 1.25
Breakdown torque	: 229 %	Temperature rise	: 80 K
Rated speed	: 1185 rpm	Design	: B
Locked rotor time	: 36s (cold) 20s (hot)		

Rev.	Changes Summary	Performed	Checked	Date

Performed by				
Checked by			Page	Revision
Date	02/07/2026		2 / 6	

This document is exclusive property of WEG S/A. Reprinting is not allowed without written authorization of WEG S/A.
Subject to change without notice

LOAD PERFORMANCE CURVE

Three Phase Induction Motor - Squirrel Cage

Customer :

Product line	: W22 NEMA Premium Efficiency Three-Phase	Product code :	11403782
		Catalog # :	HT060506NPBBW22

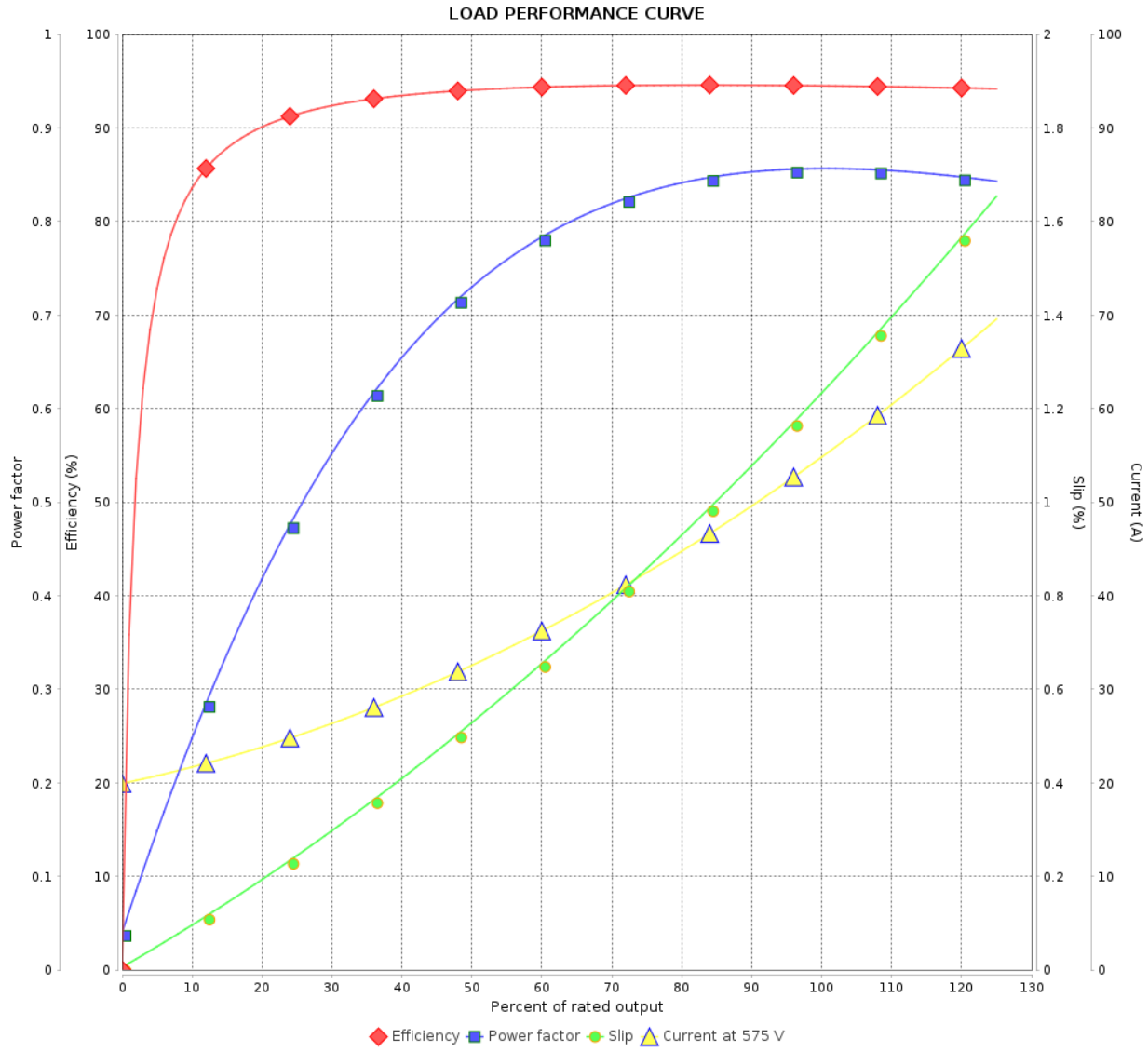

Performance	: 575 V 60 Hz 6P

Rated current	: 55.6 A	Moment of inertia (J)	: 36.9 sq.ft.lb
LRC	: 7.1	Duty cycle	: Cont.(S1)
Rated torque	: 266 ft.lb	Insulation class	: F
Locked rotor torque	: 200 %	Service factor	: 1.25
Breakdown torque	: 229 %	Temperature rise	: 80 K
Rated speed	: 1185 rpm	Design	: B

Rev.	Changes Summary	Performed	Checked	Date

Performed by				
Checked by			Page	Revision
Date	02/07/2026		3 / 6	

This document is exclusive property of WEG S/A. Reprinting is not allowed without written authorization of WEG S/A.
Subject to change without notice

THERMAL LIMIT CURVE

Three Phase Induction Motor - Squirrel Cage

Customer :

Product line	: W22 NEMA Premium Efficiency Three-Phase	Product code :	11403782
		Catalog # :	HT060506NPBBW22

Performance : 575 V 60 Hz 6P

Rated current	: 55.6 A	Moment of inertia (J)	: 36.9 sq.ft.lb
LRC	: 7.1	Duty cycle	: Cont.(S1)
Rated torque	: 266 ft.lb	Insulation class	: F
Locked rotor torque	: 200 %	Service factor	: 1.25
Breakdown torque	: 229 %	Temperature rise	: 80 K
Rated speed	: 1185 rpm	Design	: B

Heating constant

Cooling constant

Rev.	Changes Summary	Performed	Checked	Date

Performed by				
Checked by			Page	Revision
Date	02/07/2026		4 / 6	

This document is exclusive property of WEG S/A. Reprinting is not allowed without written authorization of WEG S/A.
Subject to change without notice

THERMAL LIMIT CURVE

Three Phase Induction Motor - Squirrel Cage

Customer :

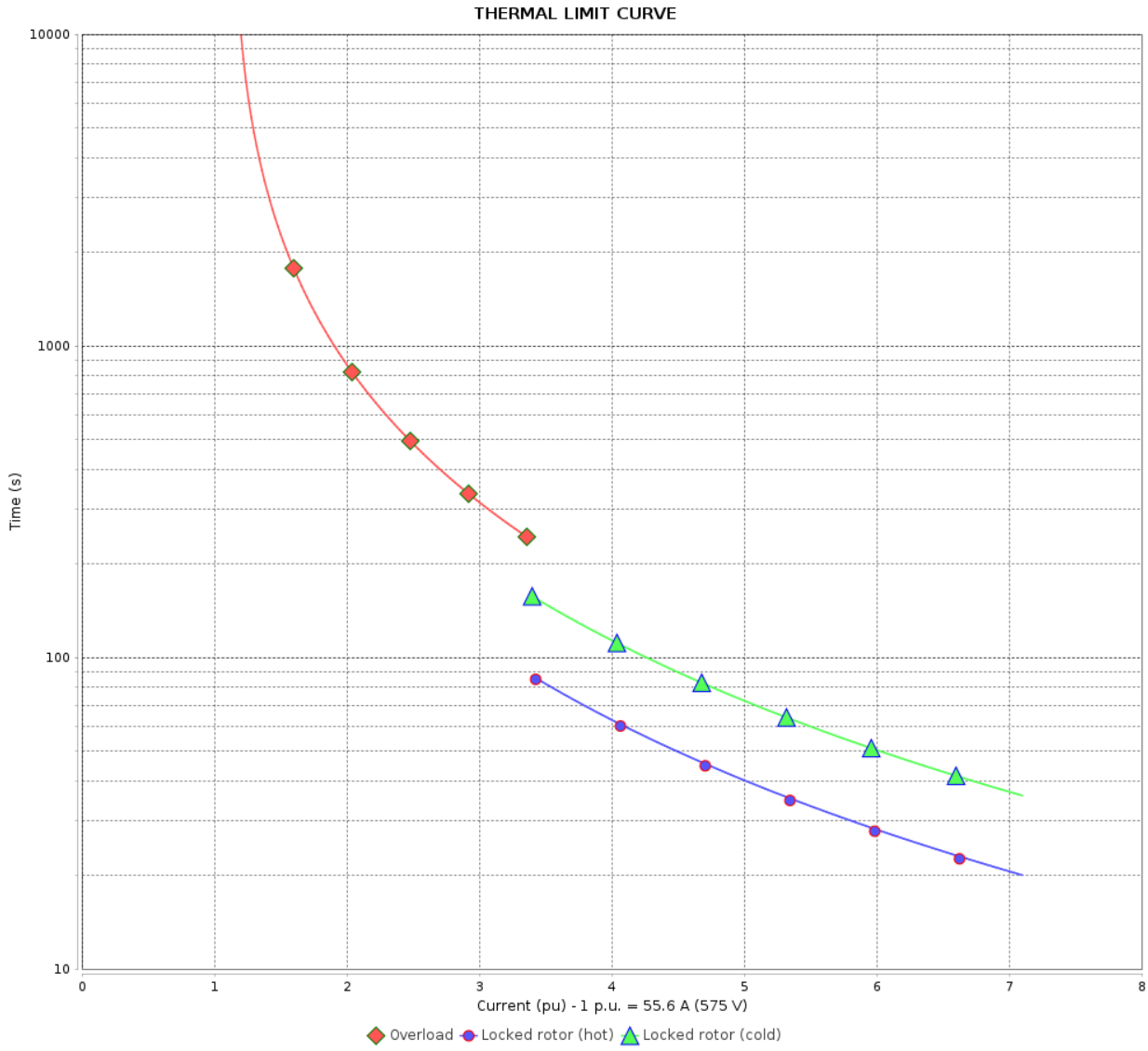

Rev.	Changes Summary	Performed	Checked	Date

Performed by				
Checked by			Page	Revision
Date	02/07/2026		5 / 6	

This document is exclusive property of WEG S/A. Reprinting is not allowed without written authorization of WEG S/A.
Subject to change without notice

VFD OPERATION CURVE

Three Phase Induction Motor - Squirrel Cage

Customer	:

Product line	: W22 NEMA Premium Efficiency Three-Phase	Product code :	11403782
		Catalog # :	HT060506NPBBW22

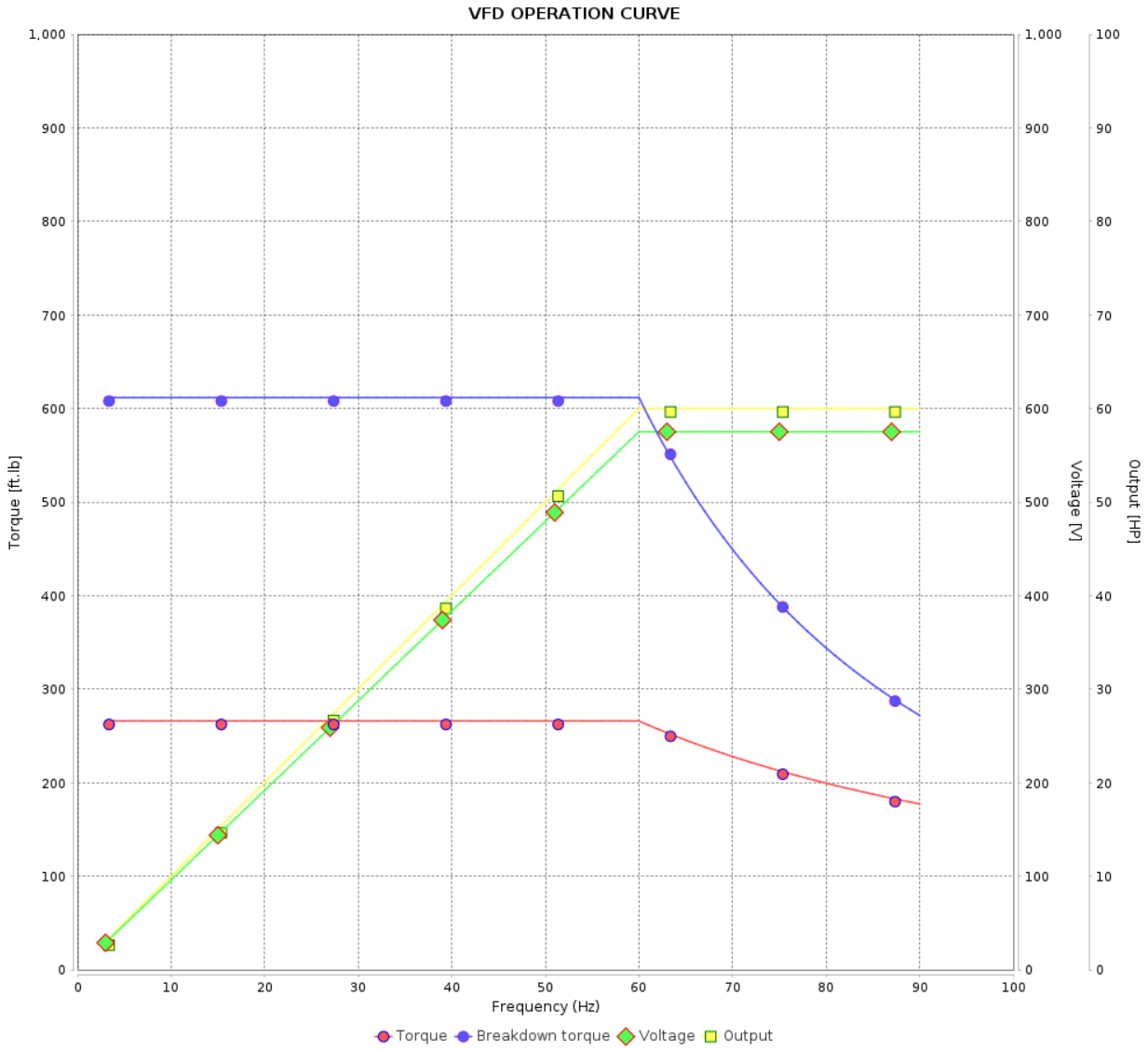

Performance	: 575 V 60 Hz 6P

Rated current	: 55.6 A	Moment of inertia (J)	: 36.9 sq.ft.lb
LRC	: 7.1	Duty cycle	: Cont.(S1)
Rated torque	: 266 ft.lb	Insulation class	: F
Locked rotor torque	: 200 %	Service factor	: 1.25
Breakdown torque	: 229 %	Temperature rise	: 80 K
Rated speed	: 1185 rpm	Design	: B

Rev.	Changes Summary	Performed	Checked	Date

Performed by				
Checked by			Page	Revision
Date	02/07/2026		6 / 6	

This document is exclusive property of WEG S/A. Reprinting is not allowed without written authorization of WEG S/A.
Subject to change without notice

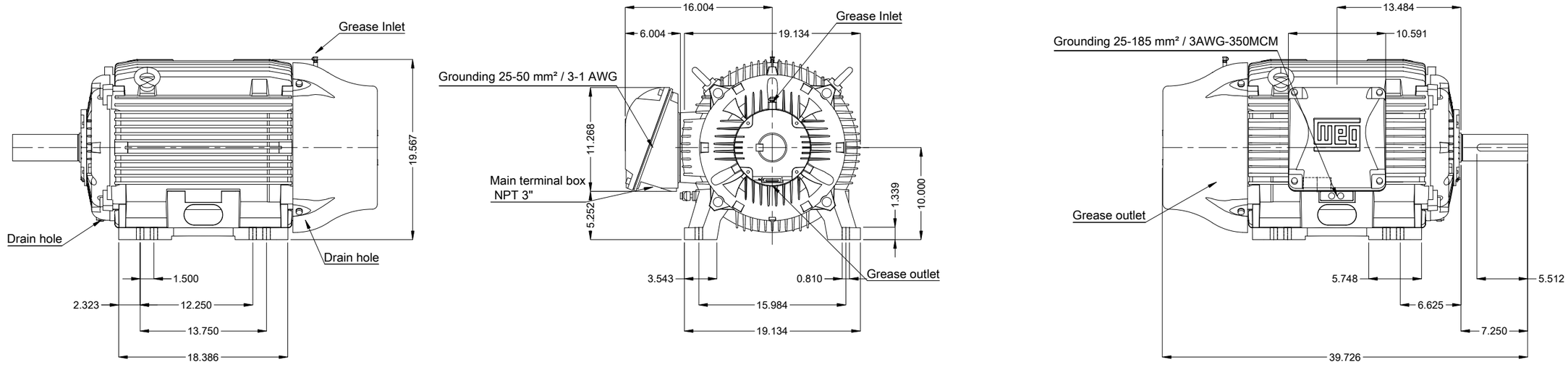

Without vertical jackscrews

Color RAL 5009

Painting plan 203A

Mounting B3R(D)

DE Shaft End

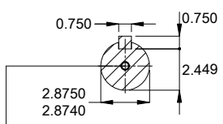

DUNC 3/4"-10 WEG WPR-7339

60 HP 06 Poles 60 Hz

A

Scale 1 : 12

ECM	LOC	SUMMARY OF MODIFICATIONS	EXECUTED	CHECKED	RELEASED	DATE	VER
			HYBRISUSER				00

EXECUTED	HYBRISUSER
CHECKED	
RELEASED	
REL. DATE	

THREE PH. MOTOR W22 NEMA PREM. EFF.
FRAME 404/5T IP55 TEFC

PREVIEW

WDD 00

SHEET 1 / 1

Dimensions in inches

A3

WEG's property. Forbidden reproduction without previous authorization.