NEMA | **Model GRA0206D-01**
MFG PN: T286T20U6B

# Model **GRA0206D-01**

## Product Data Package

| MODEL | HP | RPM | VOLTAGE | PHASE | Hz | FRAME | MOUNT | ENCLOSURE |
|---|---|---|---|---|---|---|---|---|
| GRA0206D-01 | 20 | 1180 | 230/460 | 3 | 60 | 286T | Rigid | TEFC |


## Toronto

TOLL FREE 1.888.286.1820
PHONE 905.829.1001
EMAIL info@techtopcanada.com

## Montreal

TOLL FREE 1.844.354.5111
PHONE 514.354.1002
EMAIL infoQC@techtopcanada.com

## Moncton

PHONE 506.386.5794
EMAIL infoNB@techtopcanada.com

## Winnipeg

PHONE 204.633.2779
EMAIL infoMB@techtopcanada.com

## Vancouver

PHONE 604.525.1551
EMAIL infoBC@techtopcanada.com


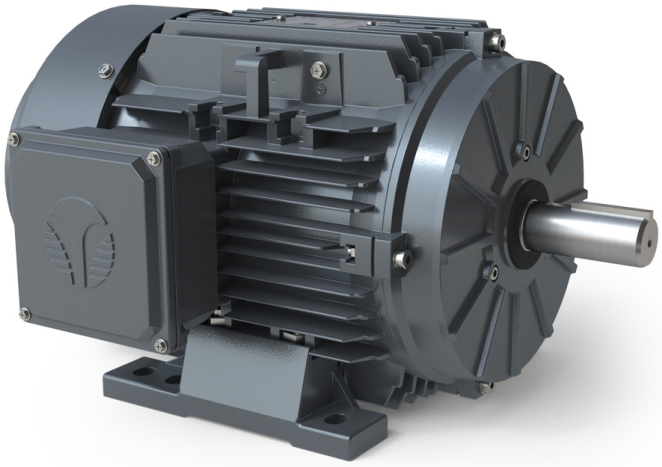

## Index


Motor General Data Sheet P 2
Nameplate Information P 3
Technical Performance Data P 4
Motor General Wiring Diagram P 5
Motor General Outline Drawing P 6

# NEMA

## Model GRA0206D-01
MFG PN: T286T20U6B

| ELECTRICAL DATA | | |
|---|---|---|
| Rated Motor Output Power | 20 | HP |
| | - | kW |
| Rated Motor Speed | 1180 | r/min 60Hz |
| | 975 | r/min 50Hz |
| Rated Motor Voltage (+/-10%) | 230/460 | V/60Hz |
| | 190/380 | V/50Hz |
| Rated Motor Current | 52.0/26.0 | A ($I_n$) @ 60Hz |
| | 62.2/31.1 | A ($I_n$) @ 50Hz |
| Phase | 3 | Ø |
| Locked Rotor Current @ High Voltage | 236.82 | A ($I_n$) @ 60Hz |
| FI Current @ 208V | 56.2 | A ($I_n$) @ 60Hz |
| Service Factor | 1.25 | @ 60Hz |
| | 1 | @ 50Hz |
| KVA Code | L | 60Hz |
| | H | 50Hz |
| Nominal Efficiency | 91.7 | % @ 60Hz |
| Nominal Power Factor | 0.79 | cosΦ @ 60Hz |
| Leads (Qty, Size) | 12 | 12 |
| Connection | DD/D | – |
| Coil Resistance | - | Ω |
| Start Capacitor | - | µF/V |
| Run Capacitor | - | µF/V |
| **VFD DUTY (S.F. 1.0)** | **RATIO** | **Hz** |
| Variable Torque | 30:1 | 2 - 60 |
| Constant Torque | 15:1 | 4 - 60 |
| **FULL LOAD TEMPERATURE RISE** | | |
| Full Load Temperature Rise | - | °C @ 60Hz |
| | - | °C @ 50Hz |

| GENERAL DATA | | |
|---|---|---|
| Frame Size | 286T | |
| Enclosure | TEFC | |
| Mounting | Rigid | |
| Approximate Weight (lbs.) | 308.9 lbs. | |
| Casing Material / Fan Cover | Cast Aluminum | Steel |
| Shaft Material | 1045 | |
| NEMA Design | A | |
| Degree of Protection (IP) | 55 | |
| Insulation Class / Temp Rise (60Hz) | F | B |
| Tropicalization | YES | |
| Duty | Cont. / S1 | |
| Conduit Box Location | F1 | |
| Feet Removable / Double Drilled | YES | YES |
| Paintwork | 7024 | |
| | Graphite Gray | |
| **MECHANICAL DATA** | | |
| Bearing DE Side | 6311 ZZ | |
| Bearing ODE Side | 6211 ZZ | |
| Grease Type | Mobil Polyrex EM | |
| Compensation Ring (wavy washer) | NDE | |
| Moment of Inertia (lb-ft$^2$) | - | |
| Sound Pressure @ 3 FT dBA | 71.2 | |
| **SITE CONDITIONS** | | |
| Ambient Temperature (°C) | 40 | |
| Meters Above Sea Level (MASL) | 1000 | |
| **HAZARDOUS LOCATIONS** | | |
| CSA Certified | A, B, C & D | |
| Temperature Code | T3A | - |

# NEMA | Model GRA0206D-01

MFG PN: T286T20U6B

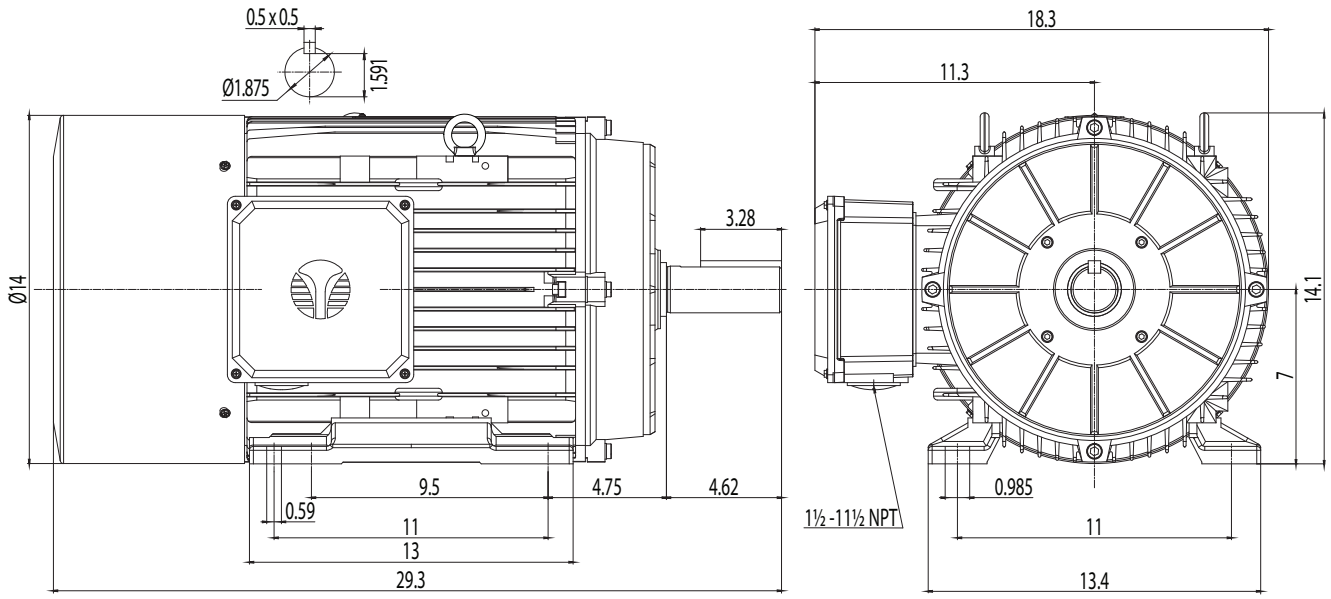


| NAMEPLATE DATA | 60Hz | 50Hz |
|---|---|---|
| Horse Power | 20 | 20 |
| RPM | 1180 | 975 |
| Voltage | 230/460 | 190/380 |
| Full Load Amps | 52.0/26.0 | 62.2/31.1 |
| Service Factor | 1.25 | 1 |
| KVA Code | L | H |
| Full Load Amps (208V) | 56.2 | - |
| Nominal Efficiency | 91.7 | 90.5 |
| Nominal Power Factor | 0.79 | 0.81 |
| Design | A | |
| Frame | 286T | |
| Enclosure Type | TEFC | |
| IP Rating | 55 | |
| Duty | Cont. / S1 | |
| Insulation Class | F | |
| Ambient Rating | 40 | |
| Drive End Bearing | 6311 ZZ | |
| Opposite Drive End Bearing | 6211 ZZ | |
| Weight (lbs) | 308.9 | |

## NAMEPLATE LAYOUT

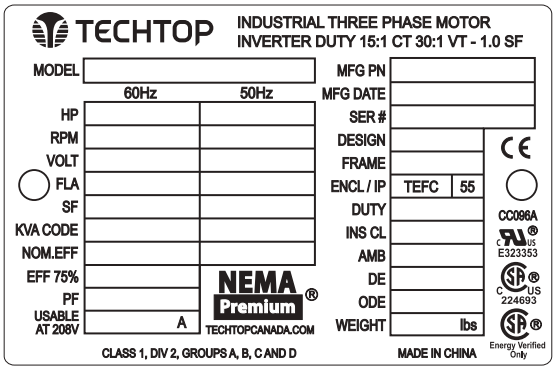


| VFD DUTY (S.F. 1.0) | RATIO | Hz* |
|---|---|---|
| Variable Torque | 30:1 | 2 - 60 |
| Constant Torque | 15:1 | 4 - 60 |

*For max speed please contact Techtop Canada

| HAZARDOUS LOCATIONS | CSA CERTIFIED |
|---|---|
| Class / Division | Class I, Div. 2 |
| Groups | A, B, C & D |

Questions? **Call 1.888.286.1820**

# NEMA

## Model GRA0206D-01

MFG PN: T286T20U6B

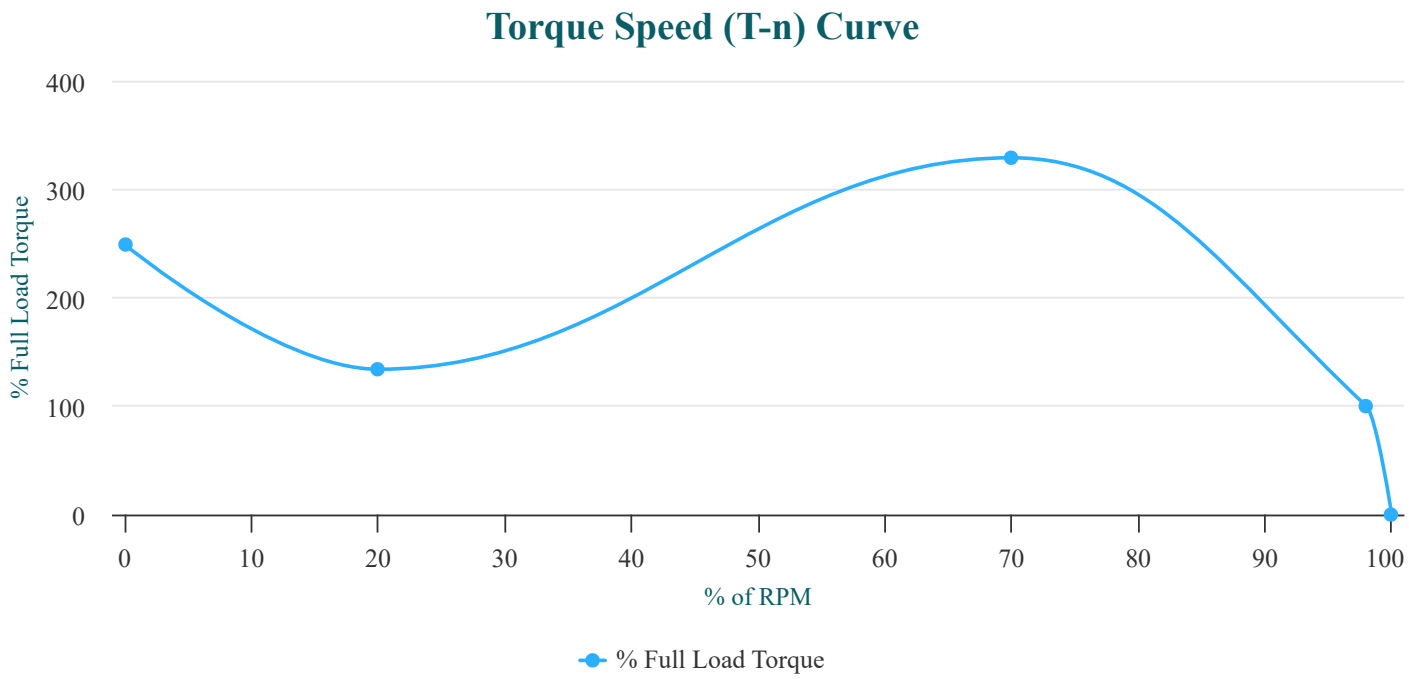


PERFORMANCE LOAD VALUES, HIGH VOLTAGE, 60Hz

| TORQUE VALUES | TORQUE (lb-ft) | TORQUE (% FULL LOAD) |
|---|---|---|
| Locked Rotor Torque | 221.7 | 249 |
| Pull-Up Torque | 119.3 | 134 |
| Breakdown Torque | 292.9 | 329 |
| Full Load Torque | 89 | 100 |

TYPICAL PERFORMANCE - NOT GUARANTEED VALUES

| PERFORMANCE VALUES | |
|---|---|
| Start Configuration | DOL |
| Starting Current (A) | 236.82 |
| No-Load Current (A) | 11.9 |
| No-Load Power Factor | - |

| % OF RATED LOAD | 25 | 50 | 75 | 100 | 125 | S.F. 1.25 |
|---|---|---|---|---|---|---|
| Line Amperes (A) | 13.2 | 16.2 | 20.2 | 25.1 | 30.6 | 30.6 |
| Efficiency (%) | 86.3 | 91.2 | 92.2 | 92.2 | 91.6 | 91.6 |
| Speed (r/min) | 1196 | 1192 | 1188 | 1183 | 1178 | 1178 |
| Power Factor (cosΦ) | 0.41 | 0.64 | 0.76 | 0.81 | 0.84 | 0.84 |
| Input Power (kW) | 4.35 | 8.23 | 12.2 | 16.28 | 20.48 | 20.48 |

# NEMA

## Model GRA0206D-01

MFG PN: T286T20U6B

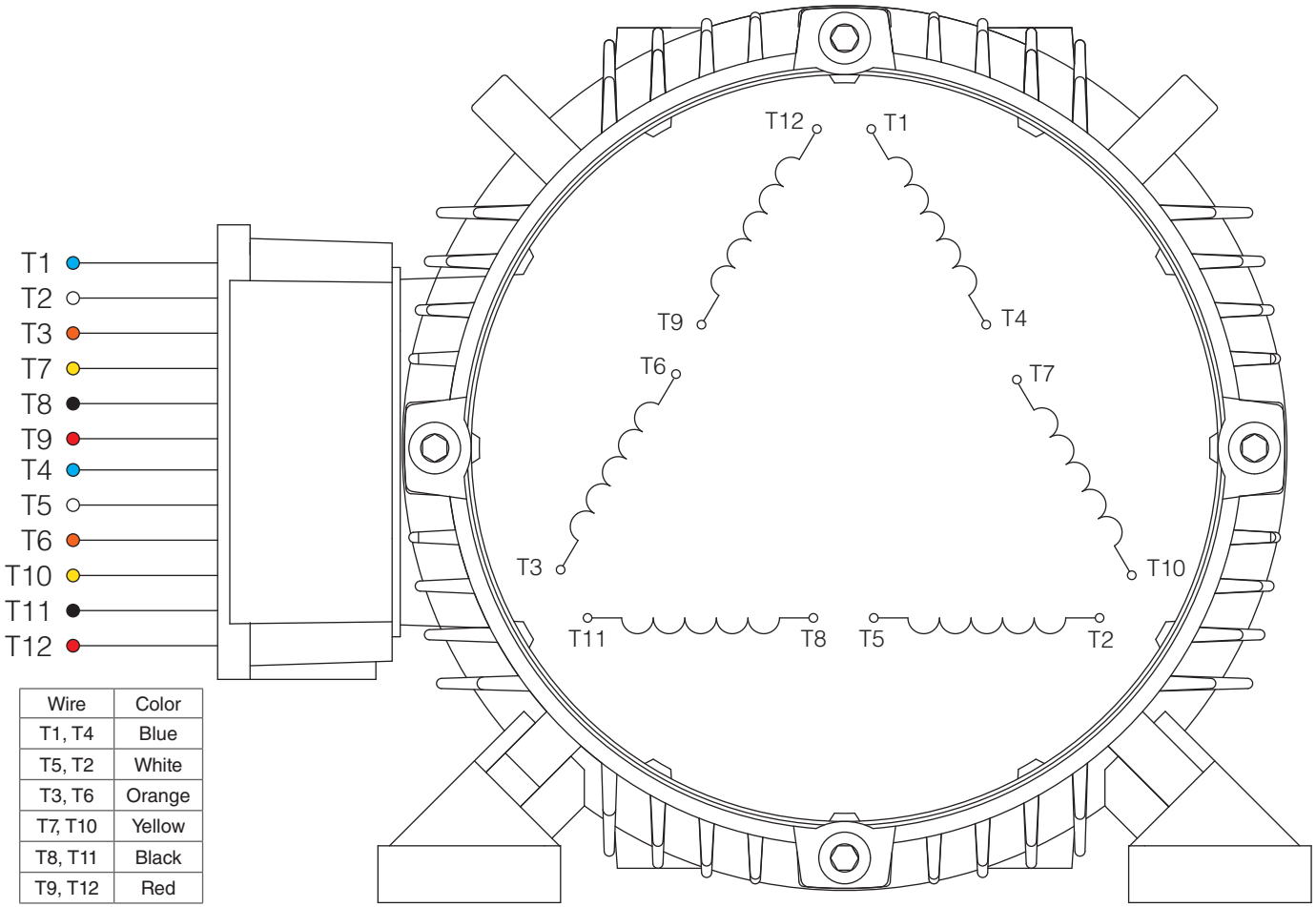


| Wire | Color |
|---|---|
| T1, T4 | Blue |
| T5, T2 | White |
| T3, T6 | Orange |
| T7, T10 | Yellow |
| T8, T11 | Black |
| T9, T12 | Red |

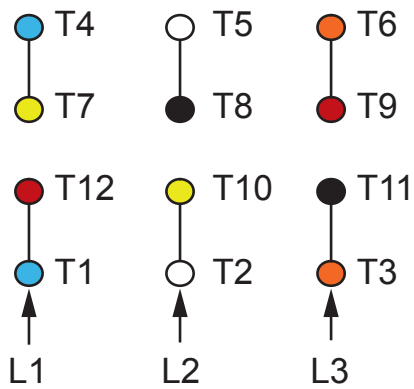


HIGH VOLTAGE
(Δ)

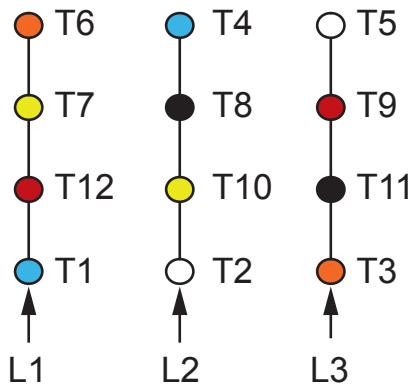


LOW VOLTAGE
(ΔΔ)

NOTES:

1. CCW ROTATION FACING ODE FOR CONNECTIONS SHOWN
2. TO REVERSE ROTATION, SWAP ANY TWO INPUT LINES
3. WHEN MOTOR IS IN F1 POSITION, LEADS INDICATED WITH "*" EXIT THE CASING ABOVE THE CENTER LINE OF THE MOTOR, THE REMAINING LEADS EXIT BELOW THE CENTER LINE
4. LEADS MUST BE NUMBERED AND COLORED AS SHOWN
5. DIAGRAMS FOR REFERENCE ONLY

TECHTOP
You can't top a Techtop.

**NEMA 3Ø DD/D 12-Lead Dual Voltage**

| | |
|---|---|
| DRAWING NUMBER: | NEMA-3-12-DD-D |
| CONNECTION: | DD/D |
| NUMBER OF LEADS: | 12 |
| THERMAL PROTECTION: | - |

| | |
|---|---|
| ISSUED DATE | 18/02/25 |

PREMIUM T-FRAME ALUMINUM MOTORS

# NEMA

## Model GRA0206D-01

MFG PN: T286T20U6B

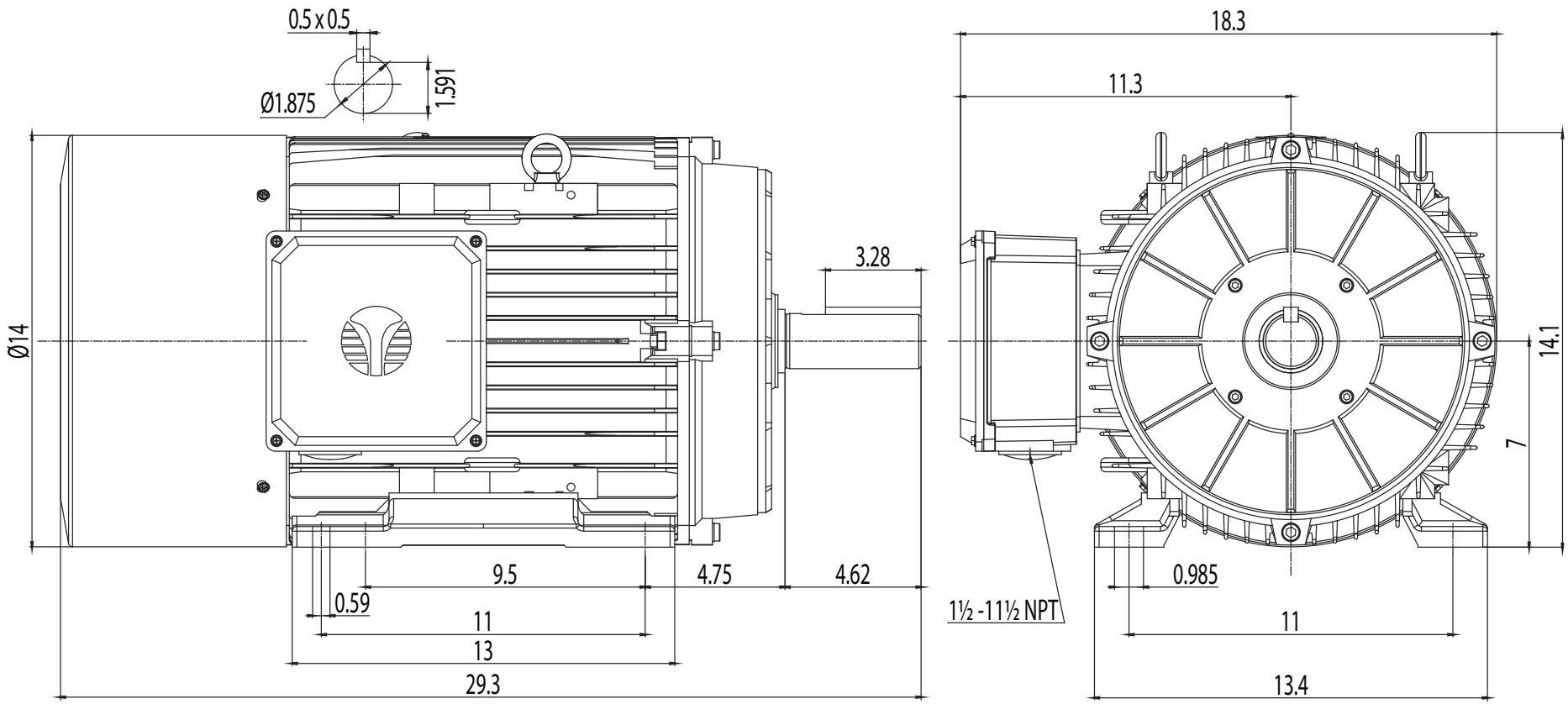


TECHTOP
You can't top a Techtop.

**NEMA Premium TEFC 286T**

| | | | |
|---|---|---|---|
| DRAWING NUMBER: | GR3-AL-TF-280T-01 | ISSUED DATE | 18/02/25 |
| DIMENSIONS: | Inches | | |
| MOUNTING: | Rigid | PREMIUM T-FRAME ALUMINUM MOTORS | |
| CASING MATERIAL: | Cast Aluminum | | |