NEMA | **Model JPA0036DP**
MFG PN: T213T 3U6B

Model **JPA0036DP**

Product Data Package

MODEL	HP	RPM	VOLTAGE	PHASE	Hz	FRAME	MOUNT	ENCLOSURE
JPA0036DP	3	1175	230/460	3	60	213JP	Rigid/C-Flange	TEFC

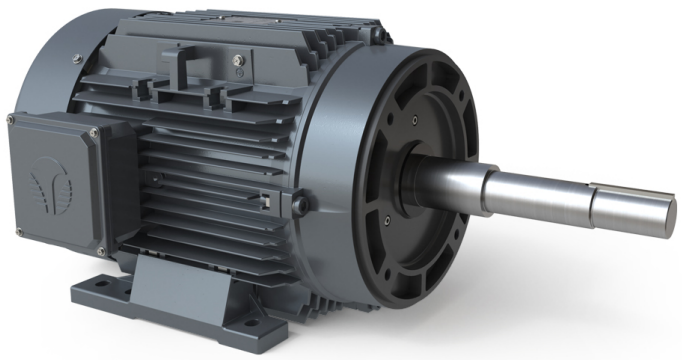

Toronto

TOLL FREE 1.888.286.1820
PHONE 905.829.1001
EMAIL info@techtopcanada.com

Montreal

TOLL FREE 1.844.354.5111
PHONE 514.354.1002
EMAIL infoQC@techtopcanada.com

Moncton

PHONE 506.386.5794
EMAIL infoNB@techtopcanada.com

Winnipeg

PHONE 204.633.2779
EMAIL infoMB@techtopcanada.com

Vancouver

PHONE 604.525.1551
EMAIL infoBC@techtopcanada.com

Index

Motor General Data Sheet P 2
Nameplate Information P 3
Technical Performance Data P 4
Motor General Wiring Diagram P 5
Motor General Outline Drawing P 6

NEMA

Model JPA0036DP
MFG PN: T213T 3U6B

ELECTRICAL DATA		
Rated Motor Output Power	3	HP
	-	kW
Rated Motor Speed	1175	r/min 60Hz
	975	r/min 50Hz
Rated Motor Voltage (+/-10%)	230/460	V/60Hz
	190/380	V/50Hz
Rated Motor Current	8.58/4.29	A (I_n) @ 60Hz
	10.1/5.05	A (I_n) @ 50Hz
Phase	3	Ø
Locked Rotor Current @ High Voltage	33.3	A (I_n) @ 60Hz
FI Current @ 208V	9.23	A (I_n) @ 60Hz
Service Factor	1.25	@ 60Hz
	1	@ 50Hz
KVA Code	K	60Hz
	J	50Hz
Nominal Efficiency	89.5	% @ 60Hz
Nominal Power Factor	0.71	cosΦ @ 60Hz
Leads (Qty, Size)	9	14
Connection	YY/Y	–
Coil Resistance	-	Ω
Start Capacitor	-	µF/V
Run Capacitor	-	µF/V
VFD DUTY (S.F. 1.0)	**RATIO**	**Hz**
Variable Torque	1000:1	2 - 60
Constant Torque	15:1	4 - 60
FULL LOAD TEMPERATURE RISE		
Full Load Temperature Rise	26	°C @ 60Hz
	35	°C @ 50Hz

GENERAL DATA		
Frame Size	213JP	
Enclosure	TEFC	
Mounting	Rigid/C-Flange	
Approximate Weight (lbs.)	73.5 lbs.	
Casing Material / Fan Cover	Cast Aluminum	Steel
Shaft Material	304 SS	
NEMA Design	A	
Degree of Protection (IP)	55	
Insulation Class / Temp Rise (60Hz)	F	B
Tropicalization	YES	
Duty	Cont. / S1	
Conduit Box Location	F1	
Feet Removable / Double Drilled	YES	YES
Paintwork	7024	
	Graphite Gray	
MECHANICAL DATA		
Bearing DE Side	6210 2RS	
Bearing ODE Side	6208 2RS	
Grease Type	Mobil Polyrex EM	
Compensation Ring (wavy washer)	NDE	
Moment of Inertia (lb-ft^2)	-	
Sound Pressure @ 3 FT dBA	62.8	
SITE CONDITIONS		
Ambient Temperature (°C)	40	
Meters Above Sea Level (MASL)	1000	
HAZARDOUS LOCATIONS		
CSA Certified	A, B, C & D	
Temperature Code	T3A	-

NEMA | Model JPA0036DP

MFG PN: T213T 3U6B

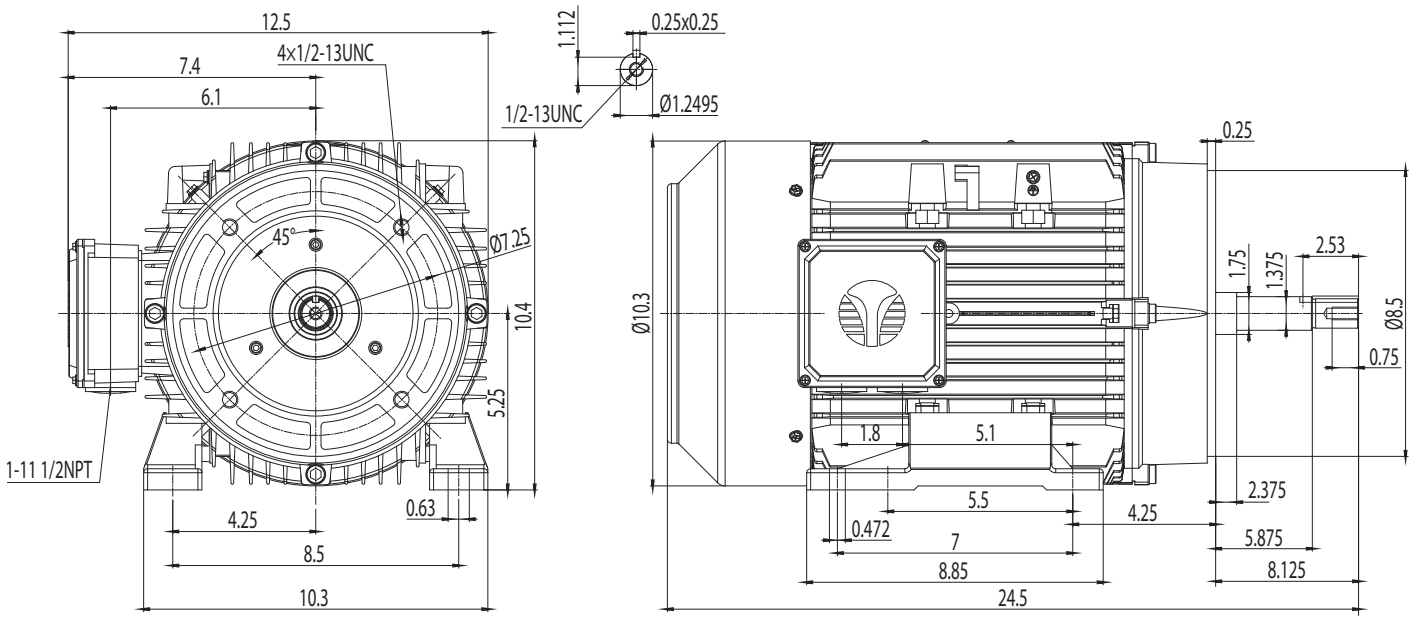

NAMEPLATE DATA	60Hz	50Hz
Horse Power	3	3
RPM	1175	975
Voltage	230/460	190/380
Full Load Amps	8.58/4.29	10.1/5.05
Service Factor	1.25	1
KVA Code	K	J
Full Load Amps (208V)	9.23	-
Nominal Efficiency	89.5	88.1
Nominal Power Factor	0.71	-
Design	A	
Frame	213JP	
Enclosure Type	TEFC	
IP Rating	55	
Duty	Cont. / S1	
Insulation Class	F	
Ambient Rating	40	
Drive End Bearing	6210 2RS	
Opposite Drive End Bearing	6208 2RS	
Weight (lbs)	73.5	

NAMEPLATE LAYOUT

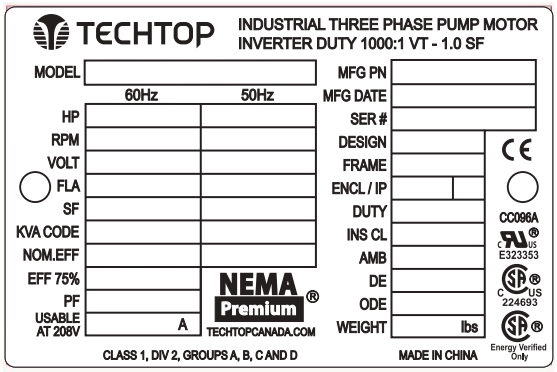

VFD DUTY (S.F. 1.0)	RATIO	Hz*
Variable Torque	1000:1	2 - 60
Constant Torque	15:1	4 - 60

*For max speed please contact Techtop Canada

HAZARDOUS LOCATIONS	CSA CERTIFIED
Class / Division	Class I, Division II
Groups	A, B, C & D

Questions? **Call 1.888.286.1820**

NEMA

Model JPA0036DP

MFG PN: T213T 3U6B

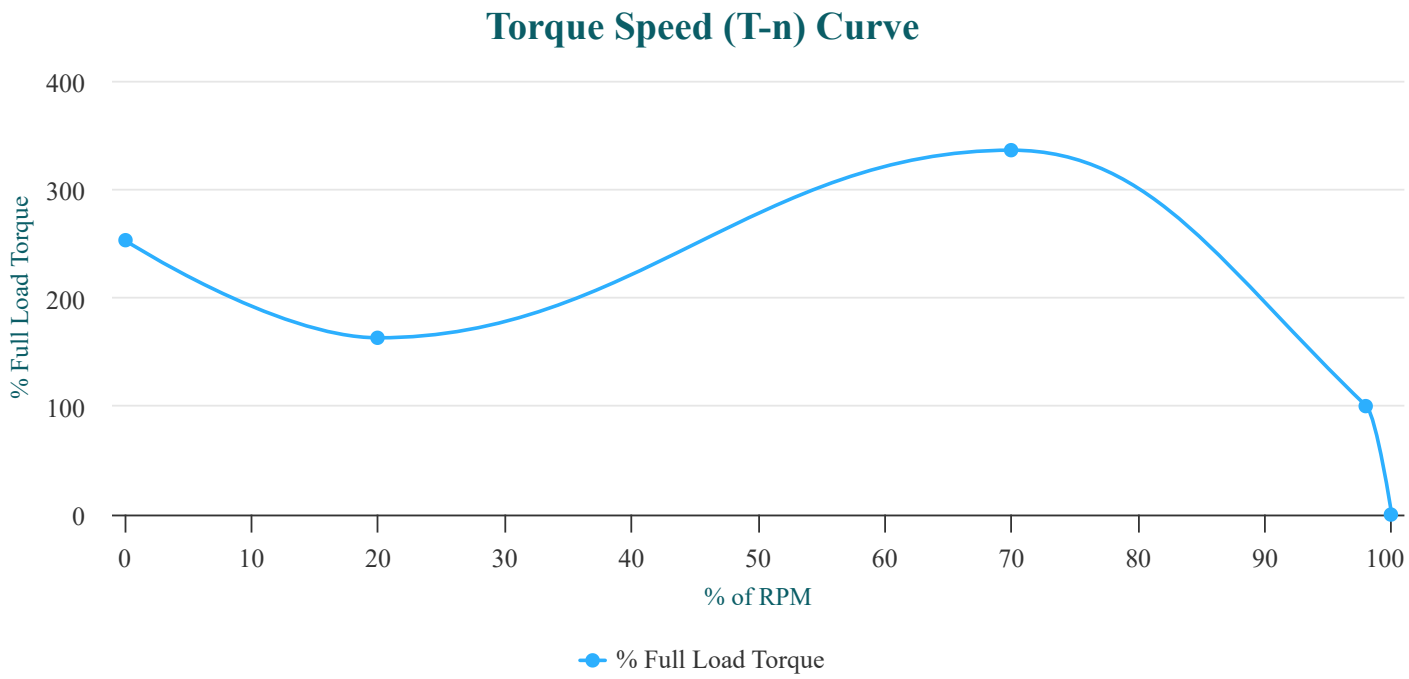

PERFORMANCE LOAD VALUES, HIGH VOLTAGE, 60Hz

TORQUE VALUES	TORQUE (lb-ft)	TORQUE (% FULL LOAD)
Locked Rotor Torque	13.4	253
Pull-Up Torque	21.9	163
Breakdown Torque	45.1	336
Full Load Torque	33.9	100

TYPICAL PERFORMANCE - NOT GUARANTEED VALUES

PERFORMANCE VALUES	
Start Configuration	DOL
Starting Current (A)	33.3
No-Load Current (A)	2.6
No-Load Power Factor	0.07

% OF RATED LOAD	25	50	75	100	125	S.F. 1.25
Line Amperes (A)	2.7	3.1	3.7	4.3	5.1	5.1
Efficiency (%)	79	86.7	88.9	89.4	89.1	89.1
Speed (r/min)	1195	1191	1186	1181	1175	1175
Power Factor (cosΦ)	0.32	0.51	0.64	0.71	0.76	0.76
Input Power (kW)	0.7	1.27	1.86	2.46	3.09	3.09

NEMA

Model JPA0036DP

MFG PN: T213T 3U6B

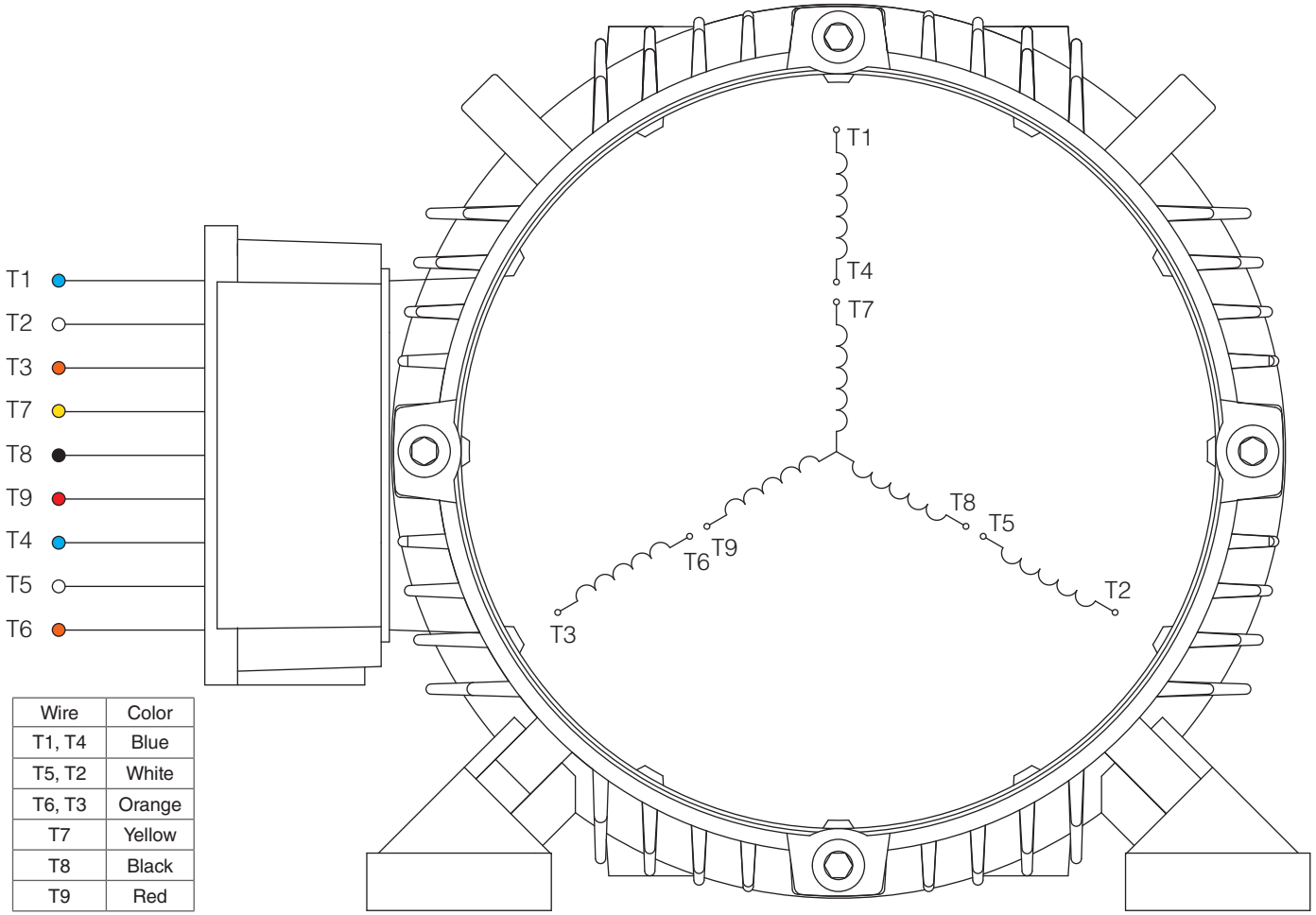

Wire	Color
T1, T4	Blue
T5, T2	White
T6, T3	Orange
T7	Yellow
T8	Black
T9	Red

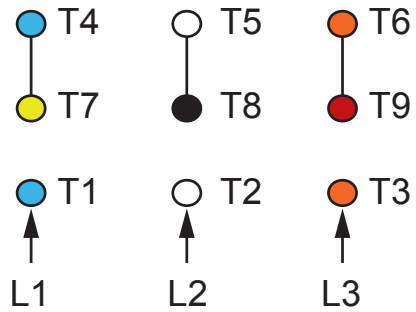

HIGH VOLTAGE
(Y)

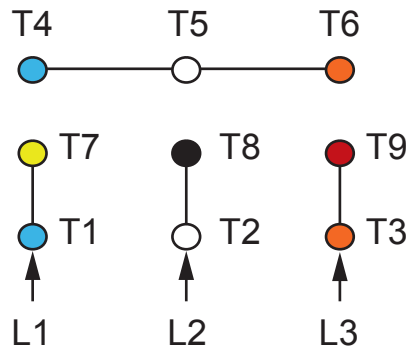

LOW VOLTAGE
(YY)

NOTES:

1. CCW ROTATION FACING ODE FOR CONNECTIONS SHOWN
2. TO REVERSE ROTATION, SWAP ANY TWO INPUT LINES
3. WHEN MOTOR IS IN F1 POSITION, LEADS INDICATED WITH "*" EXIT THE CASING ABOVE THE CENTER LINE OF THE MOTOR, THE REMAINING LEADS EXIT BELOW THE CENTER LINE
4. LEADS MUST BE NUMBERED AND COLORED AS SHOWN
5. DIAGRAMS FOR REFERENCE ONLY

TECHTOP
You can't top a Techtop.

NEMA 3Ø YY/Y 9-Lead Dual Voltage

DRAWING NUMBER:	NEMA-3-9-YY-Y
CONNECTION:	YY/Y
NUMBER OF LEADS:	9
THERMAL PROTECTION:	-

ISSUED DATE	15/08/25

PREMIUM JM-JP PUMP MOTORS

NEMA

Model JPA0036DP

MFG PN: T213T 3U6B

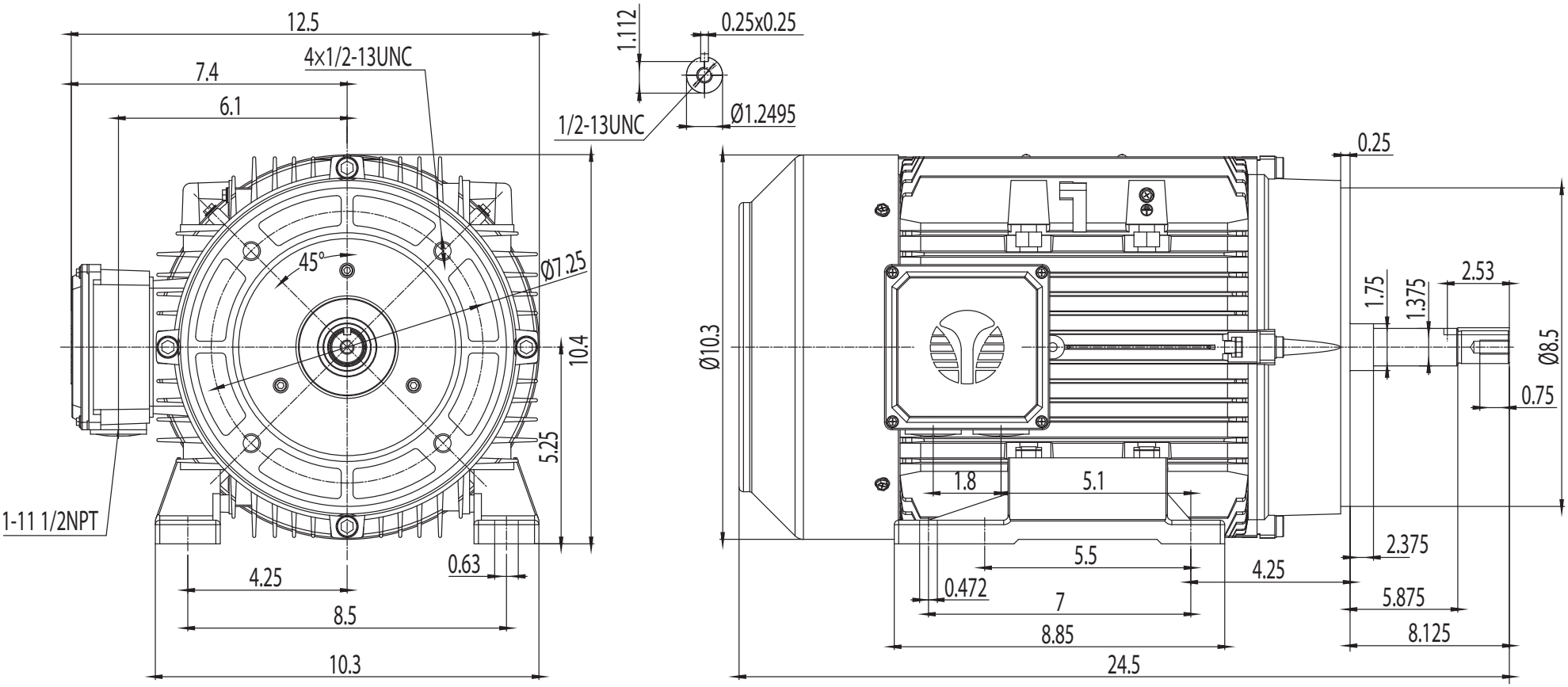

TECHTOP
You can't top a Techtop.

NEMA Premium TEFC 213JP

DRAWING NUMBER:	GR3-AL-TF-210JP	ISSUED DATE	15/08/25
DIMENSIONS:	Inches		
MOUNTING:	Rigid/C-Flange	PREMIUM JM-JP PUMP MOTORS	
CASING MATERIAL:	Cast Aluminum		